1 Energy and Galerkin Approaches

1.1 Introduction

The finite element (FE) method has become a powerful tool for the numerical solution of a wide range of engineering problems. Applications range from deformation and stress analysis of automotive, aircraft, building, and bridge structures to field analysis of heat flux, fluid flow, magnetic flux, seepage, and other flow problems. With advances in computer technology and CAD systems, complex problems can be modeled with relative ease. Several alternative configurations can be tested on a computer before the first prototype is built. All of this suggests that we need to keep pace with these developments by understanding the basic theory, modeling techniques, and computational aspects of the FE method. In this method of analysis, a complex region defining a continuum is discretized into simple geometric shapes called finite elements. The material properties and the governing relationships are considered over these elements and expressed in terms of unknown values at element corners. An assembly process, duly considering the loading and constraints, results in a set of equations. Solution of these equations gives us the approximate behavior of the continuum.

Basic ideas of the FE method originated from advances in aircraft structural analysis. In 1941, Hrenikoff presented a solution to elasticity problems using the "framework method." A paper by Courant, which used piecewise polynomial interpolation over triangular subregions to model torsion problems, appeared in 1943. Turner et al. derived stiffness matrices for truss, beam, and other elements, and presented their findings in 1956. The term *finite element* was first coined and used by Clough in 1960. In the early 1960s, engineers used the method for approximate solution of problems in stress analysis, fluid flow, heat transfer, and other areas. Papers by Argyris in 1955 on energy theorems and matrix methods laid a foundation for further developments in FE studies. The first book on finite element analysis (FEA) by Zienkiewicz and Cheung was published in 1967. In the late 1960s and early 1970s, FEA was applied to nonlinear problems and large deformations. Oden's book on nonlinear continua appeared in 1972. The mathematical foundations were laid in the 1970s. New element development, convergence studies, and other related areas fall in this category. Today, the developments in mainframe computers and the availability of powerful microcomputers have brought this method within reach of students and engineers working in small industries.

1.2 Outline of Presentation

In this book, we adopt both energy and Galerkin approaches. The energy approach may be categorized as a variational approach, and Galerkin's belongs to the category of weighted residual approaches. This chapter presents the basic concepts behind these two approaches along with several solved examples and end-of-chapter exercises. In this chapter, as well as in the text broadly, the energy approach is used for mechanics problems, namely rods, beams, and elasticity (Chapters 1, 3, 5–7, 9–11), as it is well suited to this class of problems and consequently easier to grasp for students. Galerkin's approach is used for heat conduction and other scalar field problems (Chapters 1, 4, 8, 11) as an energy form is not readily available and often does not exist. Rather, a differential equation is derived based on conservation laws and is used as the starting point for deriving the needed matrices. However, once Galerkin's approach is understood, it can be readily applied to mechanics problems as well, where it reduces to the principle of virtual work.

The focus in the current chapter is to give the student a good foundation and practice in obtaining approximate solutions via both energy and Galerkin approaches, together with related concepts such as admissible Ritz functions, strong and weak forms, and properties of a differential operator. Approximating the displacement or temperature field is a common step in both energy and Galerkin approaches. Simple polynomial or trigonometric approximations are used in this chapter to illustrate the approaches, while FE 'piecewise' approximations are used in subsequent chapters. Thus, this chapter contains the underlying concepts and the student is urged to re-read this chapter along with its solved examples at a later stage. Piecewise approximations allow mesh refinements to be readily made to capture sharp gradients, handle irregular geometry and boundary conditions (BCs), and tackle 3D problems. Further, the locality of approximation using piecewise functions leads to sparse system of equations that can be efficiently solved even at large scale. Solving sparse equations is discussed in Chapters 2 and 6.

Chapter 9 deals with bending elements, namely beams, frames, and plates, and Chapter 10 deals with structural vibration. Chapter 11 covers miscellaneous topics including orthotropic materials and nonlinear behavior. Chapter 12 is on pre- and postprocessing. Time-dependent problems are covered in Chapters 1, 4, 8, and 10.

1.3 Overview of Types of Problems and Solution Approaches

This text deals with theory, modeling, and computer implementation of the FE method to solve a variety of engineering problems related to stress analysis and scalar field problems, the latter governed by the Helmholtz equation, which includes heat conduction. Except for an introductory chapter on nonlinear analysis (Chapter 11), the focus is on linear problems. Orthotropic materials are also discussed in Chapter 11.

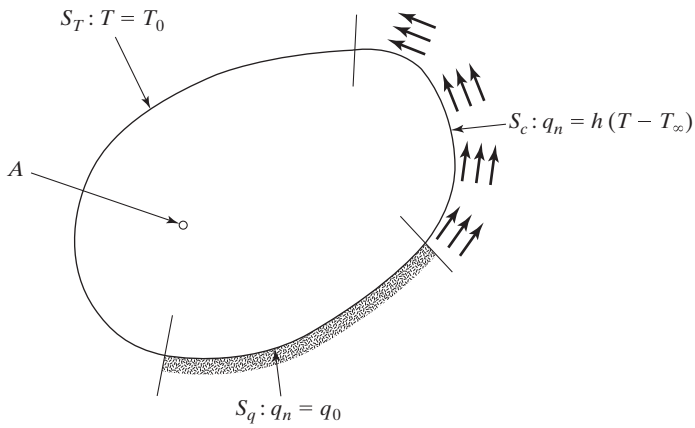

Figure 1.1 Boundary conditions in BVP-1.

1.3.1 Scalar Field Problems

Heat conduction and other scalar field problems discussed in Chapters 1, 4, 8, and 11 involve solution of the Helmholtz equation for the field variable $T(\mathbf{x}, t)$,

$$\frac{1}{\alpha}\frac{\partial T}{\partial t} = \nabla^2 T + \frac{1}{k}Q \tag{BVP-1}$$

where, generally, the heat source term $Q = Q(\mathbf{x}, T, t)$ and $\nabla^2 = \frac{\partial^2}{\partial x^2} + \frac{\partial^2}{\partial y^2} + \frac{\partial^2}{\partial z^2}$ is the Laplacian operator. Boundary conditions can involve T or $\partial T/\partial x$, $\partial T/\partial y$, or a mixed combination, as shown in Fig. 1.1. An initial condition representing the temperature distribution at $t = 0$ is specified. The above type of problem involving a differential equation along with BCs and an initial condition is called a boundary value problem, or BVP. Various engineering problems fall into this category, such as:

- heat flow in or out of windows, buildings and warehouses, chimneys, and containers; temperatures in electronic circuit boards due to heat generation from computer chips; cooling of solids removed from furnaces; and
- estimating impedance in coaxial cables and capacitors in general; friction factors in pipe flow; stresses due to twisting of non-circular shafts; determination of acoustic modes.

1.3.2 Structural Mechanics

Elasticity and solid mechanics problems discussed in Chapters 1, 3, 5–7, 9–11, involve solution of a set of equilibrium equations along with BCs, strain–displacement, stress–strain, and compatibility, as indicated in the equations below and in Fig. 1.2. Special cases of plane stress, plane strain, and axisymmetry are discussed in Chapters 6 and 7:

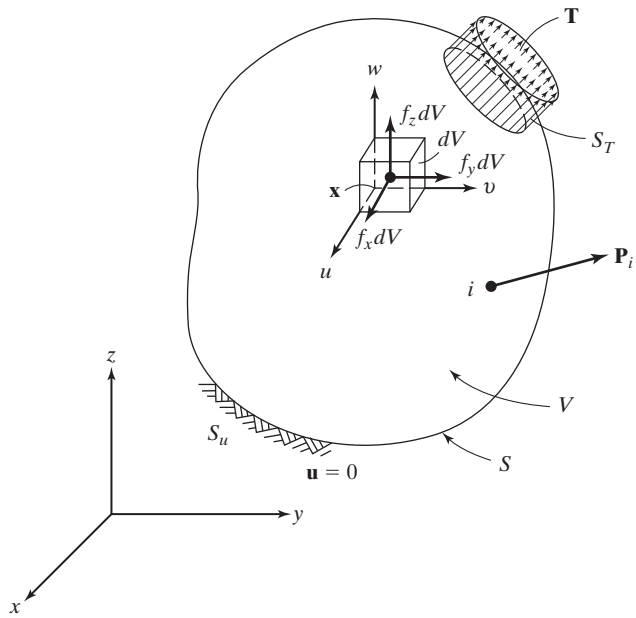

Figure 1.2 Boundary conditions in BVP-2.

$$
\begin{aligned}
&\frac{\partial \sigma_x}{\partial x} + \frac{\partial \tau_{yx}}{\partial y} + \frac{\partial \tau_{zx}}{\partial z} + f_x = \rho \frac{\partial^2 u}{\partial t^2} \\
&\cdots\cdots\cdots \\
&\sigma_x n_x + \tau_{yx} n_y + \tau_{zx} n_z = T_x \\
&\cdots\cdots\cdots \\
&\mathbf{u} = \mathbf{u}_0 \text{ on } S_u \\
&\left[\varepsilon_x, \varepsilon_y, \varepsilon_z, \gamma_{yz}, \gamma_{xz}, \gamma_{xy}\right] = \left[\frac{\partial u}{\partial x}, \frac{\partial v}{\partial y}, \frac{\partial w}{\partial z}, \frac{\partial v}{\partial z} + \frac{\partial w}{\partial y}, \frac{\partial u}{\partial z} + \frac{\partial w}{\partial x}, \frac{\partial u}{\partial y} + \frac{\partial v}{\partial x}\right] \\
&\boldsymbol{\sigma} = \mathbf{D}(\boldsymbol{\varepsilon} - \boldsymbol{\varepsilon}_0) \\
&\frac{\partial^2 \varepsilon_{xx}}{\partial y \partial z} = \frac{\partial}{\partial x}\left(-\frac{\partial \varepsilon_{yz}}{\partial x} + \frac{\partial \varepsilon_{zx}}{\partial y} + \frac{\partial \varepsilon_{xy}}{\partial z}\right) \\
&\cdots\cdots\cdots
\end{aligned}
\tag{BVP-2}
$$

Boundary conditions in beams and plates involve stress resultants which involve integrals of the stresses over the cross-section.

Various engineering problems fall into this category, such as:

- stresses and deformations due to loads and temperatures in machine components, flywheels, forging rods, and die blocks; aircraft wing and fuselage structures; bridges; and
- resonance frequencies and vibration response.

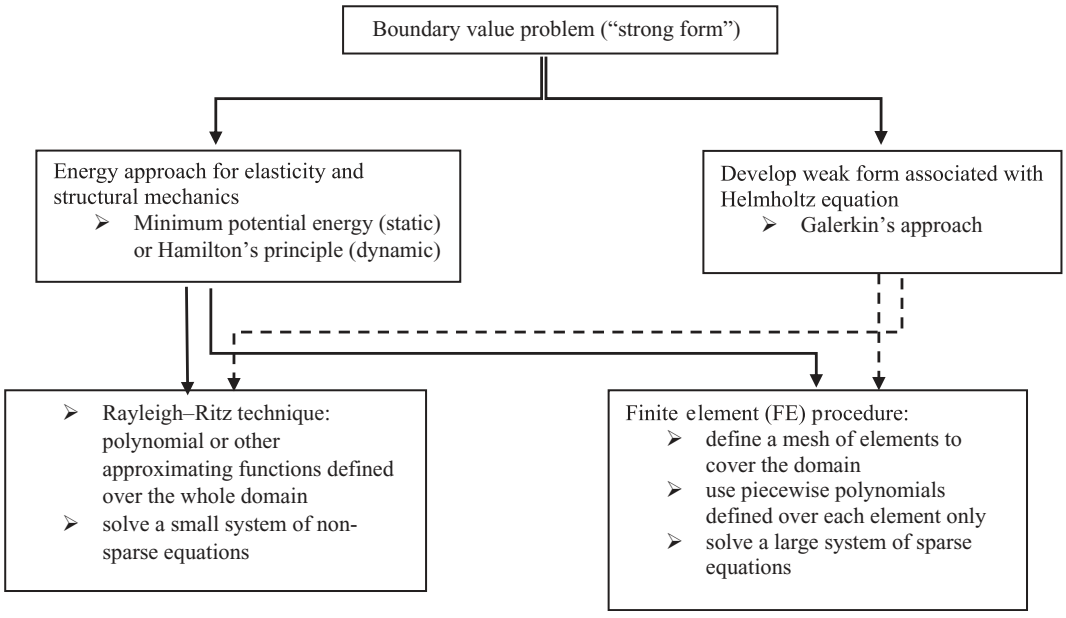

Figure 1.3 Solution approaches.

1.3.3 Solution Approaches

Analytical expressions for the solution of the above BVPs are only available for certain types of geometries and loading. Here, we focus on obtaining an approximate numerical solution. Figure 1.3 shows the solution approaches as discussed in the text.

> In this chapter, the focus is on energy and Galerkin's approaches with Ritz approximations (as opposed to piecewise approximating functions used in the FE procedure). Once this is understood, switching from Ritz functions to FE piecewise functions is easier to grasp. The reader will benefit by re-reading this chapter at a later stage.

1.3.4 Decisions Involved in Defining the Problem

The BVP statement, which comprises the differential equation with boundary and initial conditions, should capture the essential physics of the problem or process that is being modeled.

It should also be well posed. A well-posed problem is one for which: (1) a solution exists, (2) the solution is unique, and (3) the solution is stable in that a small change in the data leads to only a small change in the solution. Various decisions are involved, such as whether to include nonlinearity or dynamic effects and how best to model the BCs. Subsequently, the

level of discretization (number of terms in the polynomial or size of elements in the FE mesh) must be chosen. Thus, both modeling and meshing errors must be kept small enough so as to yield physically reasonable results. Some of these aspects, namely singularity of the stiffness matrix, *h*-convergence, adaptivity, and stress singularities are discussed in Chapters 3 and 6. For instance, consider a simply supported square plate in bending subject to a concentrated load at its center. If only peak displacement is of importance, then a thin plate model is easy to model and obtain the results; if stresses are important, then the concentrated load must be represented as a distributed load over a small area; further, a full 3D model with/without material nonlinearity may be needed.

1.3.5 Consistent Units

Finite element codes assume units are consistent. For example, if nodal coordinates are in 'm' and forces are in 'N', then Young's modulus E must be in N/m^2 or Pa. If coordinates are in 'mm' and loads are in 'N', then E must be in N/mm^2 or MPa. In N-m units, density ρ must be in kg/m^3, since then force in N equals $\rho \times$ volume $\times$ acceleration. As an example, consistent units for steel are indicated in Table 1.1.

1.4 Computer Programs

Computer use is an essential part of the FE analysis. Well-developed, well-maintained, and well-supported computer programs are necessary in solving engineering problems and interpreting results. Many available commercial FE packages fulfill these needs. Commercial packages provide user-friendly data-input platforms and elegant and easy-to-follow display formats. However, the packages do not provide an insight into the formulations and solution methods. Specially developed computer programs with available source codes enhance the learning process. We follow this philosophy in the development of this book. Every chapter is provided with computer programs that parallel the theory. These codes are available on the publisher's website, given in the preface. Also, problem-specific MATLAB® codes are listed and provided in some of the solved examples. The student will benefit by seeing how the steps given in the theoretical development are implemented in the

Table 1.1 Illustration of consistent units for steel

Units	E	ρ
N-m-s	200e9 = 200 $\times$ 10^9	7850
N-mm-s	200e3 = 200 $\times$ 10^3	7850e-12
N-mm-ms	200e3 = 200 $\times$ 10^3	7850e-6
lb-in-s	30e6	0.283/386 = 7.33e-4

programs. Further, the solved examples can serve as a testbed of problems for the student to solve and thereby gain proficiency using commercial software.

A list of all programs is given at the end of each chapter.

- Source codes are provided in \Matlab\, \Fortran\, \Python\, \JavaScript\, \Excel VBA\, and \C\ directories for various FE programs specific to each chapter. Input files used by these programs are in the \EXAMPLES\ directory. Solved examples and additional MATLAB® programs are in \EXTRAS\.
- Refer to the *Readme* file given in the repository.
- The main program variables used and structure of input data files is given in Appendix 1.

1.5 Energy Approach

In this approach, a functional such as total potential energy is needed whose extremum provides the solution. It is also called the variational approach. In static problems in mechanics, the total potential energy is an integral written in terms of the displacement field, which is to be determined in an approximate manner. In dynamics, the integral of a Lagrangian serves as the functional. The unknown field variable can be, for instance, displacement, temperature, pressure, potential, or a wave function. It is approximated by polynomial or other interpolating functions. This 'discretization' reduces the functional to a function of a finite number of unknown parameters, which are then determined by setting the differentials to zero. The process is called the Rayleigh–Ritz or Ritz method.

As noted above, the energy approach is well suited to problems in mechanics. Using simple classes of 1D problems, strain energy, kinetic energy, work potential, principle of minimum potential energy, Hamilton's principle, and the Rayleigh–Ritz method are explained here. Linear elastic behavior and small deformation are assumed in the expressions below, and external forces are assumed to be conservative (unlike friction, which is nonconservative). In an energy approach, one can consider the effect of adding energies from special effects (e.g., shear, rotational inertia, Coriolis). Convenient coordinate systems may be used. It is convenient to discard selected terms such as those involving small energies, compute the solution, and then compare with the experiment. Energy in 2D and 3D systems is presented in Chapter 5.

1.5.1 Energy in a Spring System

Strain energy is the internal energy stored in a body due to deformation. Strain energy in a spring is simply $U_{\text{spring}} = \frac{1}{2}\, k\ \delta^2$, where $\delta =$ extension or compression in the spring and k is the spring constant. The spring constant can be experimentally measured as the load divided by

the displacement, or can be determined using strength of materials formulae. For a uniform rod in constant tension or compression, $k = \frac{EA}{L}$, where E = Young's modulus, A = cross-sectional area, and L = length. For a uniform rod in torsion (round cross-section), $k_t = \frac{GJ}{L}$, where G = shear modulus and J = polar moment of inertia. If the left and right ends of a spring have displacements u_1 and u_2, respectively, then $\delta = u_2 - u_1$ and $U_{\text{spring}} = \frac{1}{2}\, k\, (u_2 - u_1)^2$. Force in the spring equals $k\delta$. In a torsional spring, we have $U_{\text{spring}} = \frac{1}{2}\, k_t\, (\theta_2 - \theta_1)^2$. In a spring system with n nodes, $U_{\text{spring system}} = \sum_{i=1}^{n} \frac{1}{2}\, k_i\, \delta_i^2$. Example 1.1 illustrates this in detail. If the mass of the spring is not negligible, then its kinetic energy can be estimated based on expressions for a rod in axial deformation, given in the next subsection.

1.5.2 Energy in a Rod Undergoing Axial Deformation

Consider the 1D problem of a rod subject to axial forces, as shown in Fig. 1.4. The axial displacement u is a function of position, and is referred to as the displacement *field*. This fact makes the problem a *continuum*. Referring to Fig. 1.4, we have the relations (see, e.g., Dym and Shames 1973)

$$\sigma_x = E\, \varepsilon_x \qquad \text{Hooke's law,} \tag{1.1a}$$

$$\varepsilon_x = \frac{du}{dx} \qquad \text{strain–displacement relation,} \tag{1.1b}$$

$$\frac{d\sigma_x}{dx} + f_x = 0 \;\Rightarrow\; \frac{d}{dx}\left(E\,\frac{du}{dx}\right) + f_x = 0 \qquad \text{equilibrium, } A = \text{constant,} \tag{1.1c}$$

$$dV = A\,dx \tag{1.1d}$$

$$U = \frac{1}{2}\int_V \sigma_x\, \varepsilon_x\, dV \qquad \text{total strain energy,} \tag{1.2}$$

where, $u(x)$ = axial displacement, σ_x = stress in the x-direction or simply axial stress, and ε_x = axial strain, A = cross-sectional area, V = volume, L = length, E = Young's modulus of elasticity, f_x = body force = force per unit volume (e.g. N/m^3), and U = total strain energy

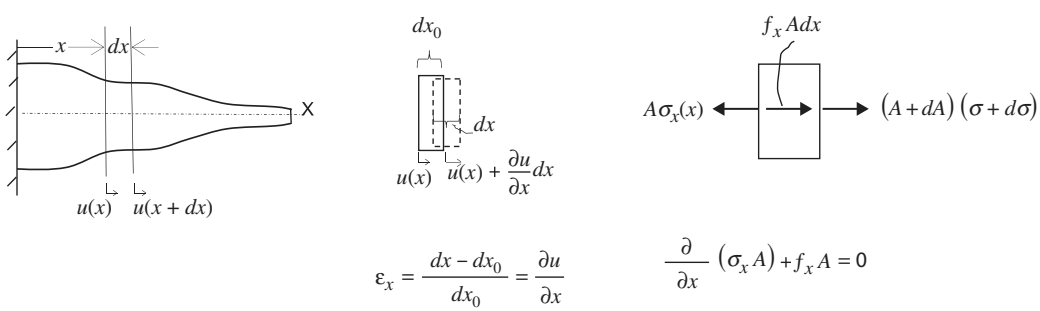

Figure 1.4 Axial deformation of a rod (1D elasticity).

in the body (e.g., N·m). Examples of body forces are gravity, inertial force due to acceleration, and electromagnetic forces. Solved examples in this text will use these relations. In general, all of these are functions of x, which is the position of a point along the rod. From the above,

$$U = \frac{1}{2}\int_0^L E\,A\left(\frac{du}{dx}\right)^2 dx \tag{1.3}$$

In a dynamic situation, $u \equiv u(x,t)$. Denoting $\dot{u} \equiv \frac{\partial u}{\partial t}$, $\rho =$ density, kinetic energy is

$$KE = \frac{1}{2}\int_0^L \rho\,A\,\dot{u}^2\,dx \tag{1.4}$$

1.5.3 Energy in a Beam Undergoing Bending

By jumping on a diving board, the board (a cantilever beam) stores strain energy, which is then released and projects the diver up and forward for a dive into the swimming pool. From elementary beam theory, for beams with cross-sections that are symmetric with respect to the plane of loading (Fig. 1.5),

$$\sigma_x = -\frac{M}{I}y, \quad \varepsilon_x = \frac{\sigma_x}{E}, \quad \frac{d^2v}{dx^2} = \frac{M}{EI} \tag{1.5}$$

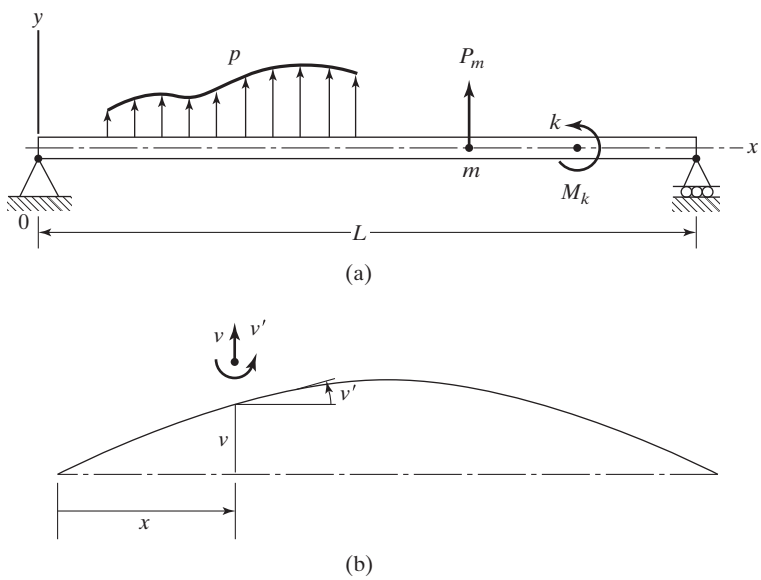

Figure 1.5 (a) Beam loading, (b) deformation of the beam centerline.

where σ_x is the stress in the x-direction, which is normal to the cross-section, ε is the normal strain, M is the bending moment at the section, v is the deflection of the centroidal axis at x, v' is the slope at x, and I is the moment of inertia of the section about the neutral axis (the z-axis passing through the centroid). The strain energy in an element of length dx is

$$dU = \frac{1}{2}\int_A \sigma_x\, \varepsilon_x\, dA\, dx$$
$$= \frac{1}{2}\left(\frac{M^2}{EI^2}\int_A y^2\, dA\right) dx$$

Noting that $\int_A y^2\, dA$ is the moment of inertia I, and integrating over the volume to get total energy,

$$U = \frac{1}{2}\int_0^L EI\left(\frac{d^2 v}{dx^2}\right)^2 dx \tag{1.6}$$

In dynamic response, $v \equiv v(x,t)$, $\dot{v} \equiv \frac{\partial v}{\partial t}$, and kinetic energy is

$$KE = \frac{1}{2}\int_0^L \rho\, A\, \dot{v}^2\, d\,x \tag{1.7}$$

Equation (1.7) consists of energy only due to translation of the beam cross-section. Effects of bending and shear can be added to this.

1.5.4 Work Potential

A scalar function W_P associated with *externally applied loads* is defined as

$$W_P = -\int_V f_x(x)\, u(x)\, dV - \int_S T_x(x)\, u(x)\;\, dS - \sum_i F_i\, u_i \tag{1.8a}$$

In a beam (Fig. 1.5),

$$W_P = -\int_L p(x)\, v(x)\, dx - \sum_m P_m\, v_m - \sum_k M_k\, v'_k \tag{1.8b}$$

The body force f_x, force per unit volume acts at each point in the body (gravity, inertial force due to acceleration, electromagnetic force), and thus its work potential is the integral over the volume. Traction force T_x is a surface force per unit area (fluid pressure, friction, contact force between bodies), and its work potential involves an integral over the surface of the body. F_i is a point or concentrated force (N) and its work potential equals product of force and displacement at that point in the direction of the force. The minus sign in eq. (1.8) is part of the definition of W_P.