Part I

Academic tasks

1 Abilities in academic tasks

Richard E. Snow

According to the editors, this book takes the perspective that intelligence resides in the interaction between the organism, the task the organism confronts, and the situation in which the task is confronted. The present chapter examines this perspective in research on human cognitive abilities in relation to the kinds of learning tasks typically found in academic situations. In particular, it interprets abilities as interstitial constructs concerned with explaining what happens in the interface between persons and tasks during performance.

To begin, some history is noted and some expansion of terms and concepts is introduced, since research on abilities in academic tasks needs to be seen in a larger framework. It contrasts four views of interaction. It adopts a hierarchical model of aptitude complexes, ability constructs, and component processes. It also distinguishes between three levels of instructional situation; task, treatment, and context. Next, steps toward a person–situation interaction theory of intelligence in academic learning and transfer are discussed, and some empirical examples of current research are given. The adaptation of persons to variations in instructional tasks and treatments, and of tasks and treatments to variations among persons, is considered in this light. Along the way, theoretical and methodological problems and prospects are noted for those who would pursue this kind of research. In sum, the chapter seeks to contribute to the elaboration of interactional psychology, with particular reference to theories of situated cognition and learning related to the design and analysis of formal instruction.

Terms, concepts, and problems

There are several terminological and conceptual issues that need to be addressed first. Chief among these are the various meanings of the term "interaction" and the various levels at which persons and instructional situations can be described. A further problem is the need for a conceptual language that can connect such descriptions in a common framework.

Historical notes

We need not detail its history here (see Cronbach, 1957; Ekehammer, 1974), but it is important to recognize that interactionism is not singular, new, or unique to

psychology. Several forms of interactionist thinking can be traced to ancient philosophy and identified in physical and biological science, both old and new. In psychology, there have been various fits and starts through this century (Kantor, 1924), in learning theory (Tolman, 1951), perception (Allport, 1955; Broadbent, 1973; Gibson, 1979), psychophysics (Helson, 1964), as well as personality and social psychology (Lewin, 1936; Murray, 1938).

The modern program of interactional psychology began in the late 1960's and took clear shape by the mid 1970's. Its center has been in personality theory (Endler & Magnusson, 1976; Magnusson & Endler, 1977; Mischel, 1973, 1984) but there are many new facets and connections to related fields in both European and North American research (see, e.g., Heckhausen, Schmalt & Schneider, 1985; Hettema, 1979, 1989; Hoefert, 1982; Lantermann, 1980; Magnusson & Allen, 1983; Nygaard, 1977; Pervin & Lewis, 1978; Schneider & Weinert, 1990; Wachs & Plomin, 1991). An interactionist approach to instructional psychology has advanced under the label "aptitude-treatment interaction" or ATI for short (Cronbach & Snow, 1977; Snow, 1989a). There is now a similar approach to research in psychotherapy (Dance & Neufeld, 1988; Snow, 1991a).

Generic vs. paradigmatic interactionism. Historically, many schools of psychology have claimed to address the interaction of organism and environment, or of internal and external determinants of behavior. Many theorists today make this claim, in one or another terminology. But I distinguish this loose and often unspecified, generic commitment to interactionism from a paradigmatic interactionist position, in which the relevant aspects of person and situation are specified, their interaction is demonstrated empirically, and some process explanation of how and why this occurs is offered. In other words, in my view a true interactionist position does not merely assume that some vague interactive processes operate; rather it specifies a theoretical form and methodology explicitly designed to study and understand such processes.

General vs. differential psychology. Also, in my view, a true interactionist position acknowledges the importance of individual differences among persons and addresses them explicitly. Historically, general psychology has used situation variations to study persons, but ignored person variations as irrelevant to a psychology of either persons or situations (Cronbach, 1957). Research that takes person differences seriously also has to recognize the importance of relations among cognitive, conative, and affective functions within and across persons and situations. Most past psychology, whether general or differential, has focused on one or another of these three basic functions in isolation (Hilgard, 1980). In particular, cognitive and personality psychology remain mostly noncommunicative. This chapter focuses on an interactionist theory of cognitive abilities and academic tasks, but it occasionally steps back to the larger perspective elsewhere called "aptitude theory" (Snow, 1989a, 1989b, 1991b, 1992).

Interactionism vs. new situationism. As a final historical note, it is interesting in this regard that cognitive and personality psychology have come via oddly different routes over the last three decades to similar present positions. Personality theory developed interactionist perspectives out of the debates about broad stable traits vs. situation-specific conditioning of behavior. The focus moved from the internal determinants of personology to the external determinants of situationism (and behaviorism), to the reconciliation offered by interactionism. Through more recent, social constructivist influences, one extreme form of interactionist theory now interprets personality as existing not within persons or situations but *between* them; that is, it views personality traits, presumably including cognitive abilities, as primarily social constructions (see, e.g., Hampson, 1982, 1984). Over roughly the same time scale, cognitive theory developed out of the rejection of situationist–behaviorist determinants to a personology composed of mental representations, procedures, and models (rather than traits) as internal determinants. Through more recent confluence with the interactionist emphases of cultural anthropology and linguistics, some forms of cognitive theory now interpret cognition as *situated*; that is, rather than being located in persons' heads, the structures and processes of knowing, understanding, reasoning, and learning are activities defined by *relations* between persons and tasks, or between persons. Thus, not only personality traits and abilities but also learning and reasoning processes may be thought of as social constructions (see, e.g., Lave & Wenger, 1991).

In extreme form, some theories of situated personality and situated cognition seem to promote a new situationism. Though more subtlely than in old situationism, these theories also leave most of the individuality of the person, and all of individual differences among persons, out of the picture. In any interactionist theory, in my view, a balance must be found wherein person-in-situation includes individual person predisposition and postdisposition, and thus individual difference variation within and across situations. In other words, a concept of aptitude transfer into, through, and out of learning activity in the present situation is needed. These are problems to which the discussion returns at several points below.

Interpretations of interaction

There seem to be four paradigmatic interactionist perspectives, differing mainly in their interpretation of interactive relations between persons and situations. Person–situation interactions may be seen as reflecting *independent, interdependent, reciprocal,* or *transactive* systems. The first view imposes a traditional statistical definition. The second and third accept different degrees of psychological relativity. The fourth adopts a more comprehensive relativism, and approaches the new situationism just mentioned. Unfortunately, different authors use the four terms in different ways (see, e.g., Pervin & Lewis, 1978; Wachs & Plomin, 1991). The four also imply different research methods. If at least the language can be standardized here, then a

provisional eclecticism with respect to methodology and interpretation can be recommended as likely to be most productive for research in the near term.

Independent interaction. In statistical terms, two independent variables are said to interact when their joint effect on a third, dependent variable is multiplicative rather than additive. Such interaction is usually evaluated using regression methods or analysis of variance (see Cronbach & Snow, 1977). Thus, for example, if an ability variable and a task variable interact in influencing learning outcome, then the ability-outcome regressions will be nonparallel across the two (or more) task conditions. In other words, the difference in learning outcome between more and less able persons (or experts and novices) is seen to be greater in one task condition than in another; there is differential reactivity of different persons to the task conditions. The regression slope difference may even be reversed from one condition to another.

Though technically correct, this construction can be carelessly used to interpret ability and task variables that are statistically independent as though they were *psychologically* independent and therefore inherent characteristics of persons and situations, respectively. Statistical methods are certainly useful in studying interaction, but statistical and psychological independence should not be confused.

Interdependent interaction. Two or more variables are said to be in interdependent interaction when their effects can only be understood psychologically with respect to one another. Though measured independently and treated statistically as such, the person and situation constructs are thought not to be meaningfully interpretable in isolation. For example, person ability and task difficulty can be independently measured as aspects of persons and tasks when there are applicable norms as external standards. However, ability and task difficulty are also fundamentally interdependent. Tasks can be judged difficult or easy only relative to particular persons' ability to perform them successfully. Similarly, judgments of persons' ability depend on the tasks they can and cannot perform. Clearly, no statistical analysis compels psychological interpretation to choose between independent and interdependent interaction; given the presence of statistical interaction, either interpretation may apply.

Reciprocal interaction. Beyond independent or interdependent interaction, when two or more variables also act to change one another over time, they are said to be in reciprocal interaction. The reciprocity need not be equal among all variables in a system. So for example, a person working on a task learns to change strategy, which affords use of different abilities in the task performance; the task changes as the abilities and strategies brought to bear on it change. Thus, a person who shifts from verbal analysis to spatial visualization midway through a task has changed the task psychologically. A task that affords such learning has changed the person psychologically. Such changes in person and task at one point in time may change the person–task interaction not only later in the present task sequence, but also later in other task sequences. A person who learns to shift strategy in one task may start a new task with

the new strategy, but also with the transferable idea that strategy shifting sometimes helps. Thus, learning in the task can change both the types and the levels of abilities that apply to this task performance, and to other task performances, and can do so differently for different individuals.

Transaction. When variables are regarded as in constant reciprocal interaction they are often said to be in transaction. Then they may be granted no relevant history or existence outside of the transactive system in which they are engaged, and there are no cause–effect relations to be isolated. In effect, the focus of scientific inquiry shifts away from the elements to emphasize relations among them in an action system (Dewey & Bentley, 1949). Relationships define phenomena. There are then no independent, interdependent, or reciprocal person and situation influences, but only person–situation systems and their actions; person ability and task difficulty cannot exist as meaningful concepts outside of these unions.

In the extreme version of this view, nothing known about the person or the task outside of the transactional situation is useful in studying it. This is the position referred to as "new situationism" above; there is a person-in-situation, but no personal history. However, in older transactional theories of perception (e.g., Ittelson & Cantril, 1954), cognitive development (e.g., Riegel & Meacham, 1978), and personality (e.g., Lazarus & Launier, 1978), this extreme view was not strictly maintained; each line of research needed some distinction between elements and their relationships, and between antecedent and consequent elements and relationships. As Allport (1955) put it:

> "... there are *some* things about both organism and environment that can be studied and known about in advance of ... [as well as after] their interrelationship, even though the fact that in their relationship they contribute something *to each other* is undeniable. What, then, *is* this residual nature or property of the parties to a transaction?" (p. 287, emphasis in original)

Some new transactional theories also acknowledge, at least implicitly, these residual properties as kinds of structure that can exist before and after interaction, in persons or situations or both. Summarizing the Lave and Wenger (1991) theory of learning in apprenticeships, Hanks (1991) noted that preexisting interpersonal or content structures could influence learning; also, outcomes of the transaction could adapt the participative framework in which later learning occurs. In Greeno's (1989; Greeno, Smith & Moore, in press) theory of transfer of situated learning, invariants in the structure of activities across person–situation interactions are the key. Situations provide affordances for activities. Persons learn to engage in these activities but also to perceive the relevant affordances. As two situations afford a person the same activities, as perceived, then the activities can be said to transfer from one to the other, even though the two situations might differ in many other ways. Thus, persons and situations can have transfer-relevant histories with respect to one another. Also, the changes wrought by the present person–situation transactions can have implications for these and other persons and situations in the future.

My own theory of aptitude (Snow, 1991b, 1992, in press) encompasses a reciprocal

and transactional view with histories and futures and, like Greeno's, emphasizes transfer. But I focus on individual differences in learning and transfer and thus on the residual properties as much as the transaction. I also urge that interaction research must both use and explain evidence developed from any of the four models.

A provisional eclecticism. At least initially, an eclectic stance should be most productive. Research on a transactive theory of learning abilities can use evidence from research that assumes interactions among independent person and situation variables, and vice versa. Such evidence may help classify residual properties as relatively stable vs. malleable with respect to the person–task transaction of interest (Snow, 1992). Research on interdependencies and reciprocities can help establish and extend this classification. There will likely be person properties that exist and are definable independently of situations, but also person properties that are meaningfully definable only in union with specific kinds of situations. A similar stance is needed in describing situations. There are both stable and malleable properties of academic tasks. Some define situation variables that exist independently of persons, whereas others become meaningful only as they are seen in union with persons.

Finally, a provisional eclecticism allows us to postpone some difficult theoretical choices until a thicker evidential base helps show what kind of theory we are entitled to. Although reciprocal and transactive models of interaction seem to be increasingly popular in today's postpositivist climate, some philosophers of psychological science warn that their uncritical use can lead to conceptual retrogressions (Phillips, 1987).

Levels of interaction

Both persons and situations also need description at several "grain-size" levels. Different levels involve different kinds of aggregation across persons, tasks, and time. Interactions at one level may thus appear to be quite different from those at another.

Components, abilities, and aptitude complexes. Cognitive abilities can be hierarchically organized. The history of factor-analytic research has been reviewed and reanalyzed by Carroll (1989; 1993) to yield a comprehensive and integrated hierarchical model. First-order abilities are incorporated into the second-order ability constructs of fluid reasoning (G_f), crystallized language (G_c), visual perception (G_v), auditory perception (G_a), memory (G_m), speed (G_s), and idea production (G_i) under a third-order general intelligence (G). Horn's (1989) summary is similar. And Gustafsson (1984, 1988, 1989) has demonstrated that G_f can be equated with G and also with Thurstone's (1938) first-order induction (I) factor, that residualizing G_c and G_v for G reproduces Vernon's (1950) hierarchical model, and finally that both higher-order and first-order abilities are needed to understand individual differences in learning from instruction; different ability levels can relate differently to achievement, within or between instructional treatments, and each level is needed to clarify the influence of the other.

Some theorists argue that this model reflects only a narrow, psychometrically defined, academic intelligence, which should be sharply distinguished from a broader concept of practical, everyday, real-world intelligence (see, e.g., Sternberg & Wagner, 1986). Although it is true that much psychometric and factor-analytic research on abilities has been motivated by educational problems, it is a mistake in my view to assume that academic tests and tasks represent only an artificial world disconnected from reality. In any case, the issue need not be argued here; the hierarchical model at least represents academic intelligence, the focus of this chapter.

Figure 1.1 shows an abstract version of the ability hierarchy that also includes, for the G, G_f, I column, a further breakdown into the performance tasks (i.e., tests) often used as markers for this factor, and then into the information-processing components identified by experimental analysis as constituents of performance on these tests. The best markers for this general ability factor are matrices, classification, series completion, and analogical reasoning tests. However, as suggested by the figure, tests associated with "nearby" factors, such as Necessary Arithmetic Operations, for quantitative reasoning (QR), may be described using essentially the same components plus some crystallized knowledge. The Paper Folding test represents spatial visualization (VZ) ability, but fluid analytic reasoning is one nonspatial solution strategy that can be effective, so it too may be described using the same components, at least in part, or for some people. As shown, the componential analysis is only schematic of Sternberg's (1977, 1985) theory; it merely lists the performance components, suggests some of the further component processes involved in knowledge acquisition, retrieval, and transfer, and interposes without detail the metacomponent processes that decide what the task is, choose appropriate components, organize them into a strategy, and monitor the performance. Left out also are the related interpretations of other investigators (e.g., Carpenter, Just & Shell, 1990; Embretson, 1985; Pellegrino & Glaser, 1982; Snow & Lohman, 1984). One could expand the figure by showing all the first-order abilities and their marker tests, not just those identified in it as ideational fluency (IF), verbal comprehension (VC), spatial relations (SR), sound discrimination (SD), memory span (MS), and perceptional speed (PS), along with QR, I, and VZ. Componential analyses of VC, VZ, and SR could be added (see Lohman, 1988, 1989; Sternberg, 1987), but comparable analyses are not yet available for the task markers of most other ability factors.

Also shown schematically in Figure 1.1, above the ability hierarchy, is the possibility of constructs elsewhere called "aptitude complexes" (Snow, 1987). These represent hypothesized combinations of aptitude variables that jointly influence learning in some particular situation. They reflect the view that persons are not adequately characterized by lists of independent ability variables studied in isolation. Rather, there are likely to be patterns, profiles, or compounds (i.e., complexes) of person and situation characteristics that identify qualitatively different types. There may be mixtures of several abilities, or of abilities with specialized prior knowledge, or abilities with conative or affective aptitudes (or inaptitudes), and each may have important situational aspects to their definition.

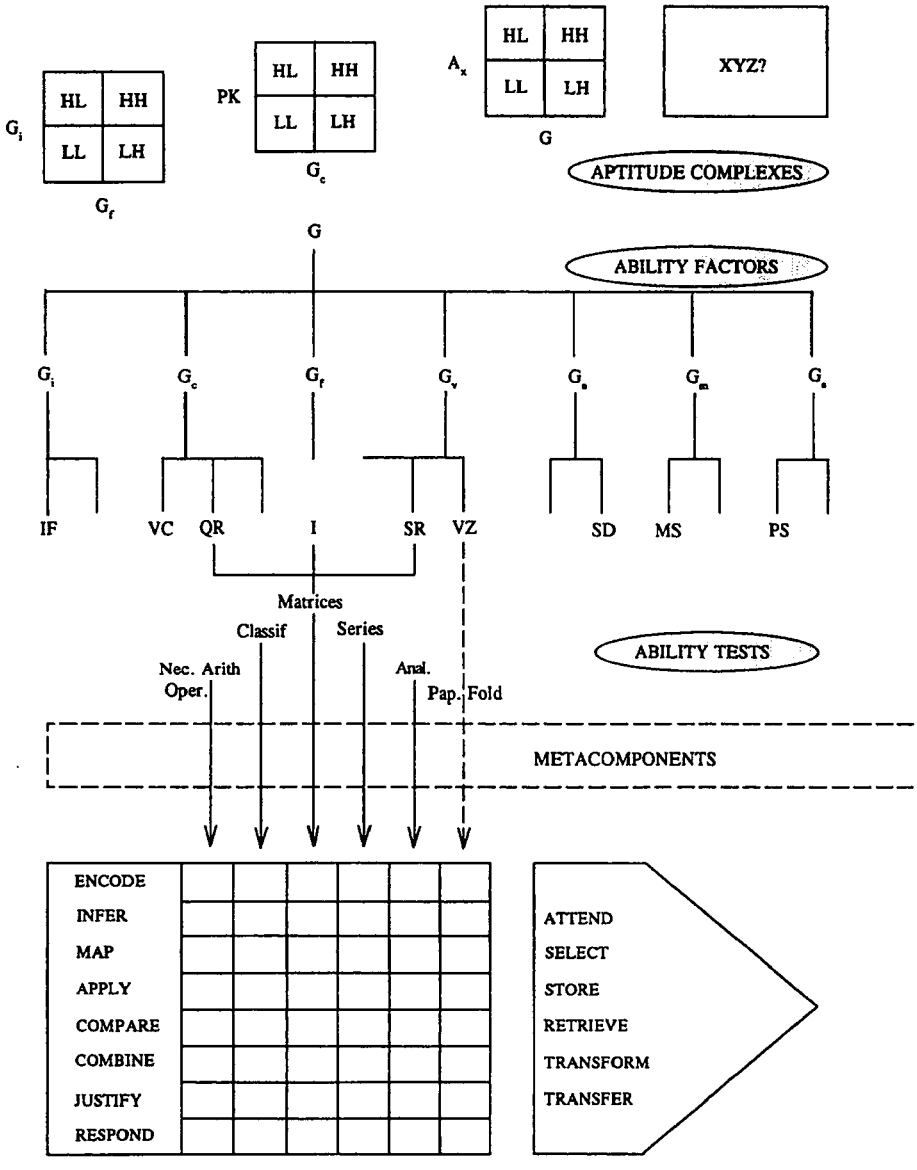

Figure 1.1. Hierarchical model of cognitive abilities showing three levels of ability factors, ability tests used as markers for the central ability $G = G_f = I$, and component processes involved in these tests. Aptitude complexes at the top are intended to suggest combinations of abilities and other characteristics of particular importance.

Three simple examples are given to suggest these possibilities. In the first, G_f and G_i are combined to identify four kinds of learners. Persons in each quadrant will differ in various ways, but only some high–high persons are likely to be described as creative, and this will be in conjunction with particular kinds of situations. Of course, many person and situation characteristics go into the making of creative performances (Sternberg & Lubart, 1991) and the pattern analysis is not simple (Cronbach, 1968); the point is that creative thinking is an aptitude complex, defined in part by situation characteristics, not a single ability. The second example shows a G_cx special prior knowledge (PK) mix, to reflect current controversies about the relative importance of general vs. situation- or domain-specific skills. Here also, what constitutes an optimum mix depends on the situation, but it is clear that high G_c–low PK learners and low G_c–high PK learners are very different persons for the purposes of instructional treatment (see, e.g., Hall & Edmondson, 1992; Schneider & Weinert, 1990; Snow & Swanson, 1992). The third example combines G and test anxiety (A_x), because there is much evidence that anxiety effects are relative to ability x task-difficulty interactions; some instructional research has also shown that high–high and low–low learners might need one kind of task structure, whereas learners in the middle ranges might need another (see Snow, 1977, 1987). The XYZ box in Figure 1.1 simply signifies that many potentially important aptitude complexes have yet to be investigated. In particular, ability–personality mixes beyond G and A_x need to be brought into instructional research (see Snow, 1989b). Interactionist approaches to personality, as noted earlier, are forming many such constructs based on complexes of person and situation variables (Mischel, 1984).

Although the ability hierarchy provides an initial taxonomy from which to choose constructs for further research, it is by no means complete. Many other kinds of person characteristics would need to be added to reach a comprehensive list of potential aptitudes for academic tasks (see, e.g., Gardner, 1983, this volume; Snow, 1990, 1992; Snow & Swanson, 1992). Furthermore, there is no "best" level from which to choose. Gustafsson (1989) showed that both broad and narrow ability constructs are needed each to help interpret the effects on learning of the other. The same can be said for components and complexes. The role of abilities is clarified when prior knowledge and personality reference variables are present, and vice versa. The nature of component processes in learning is better understood when ability reference variables are included, and vice versa. It is not clear that components, ability factors, or aptitude complexes should be regarded as more or less basic in any given instance (Carroll, 1980; Sternberg, 1980).

Finally, the ability hierarchy should not be regarded as some kind of fixed trait structure. It is rather the complex result of human development, produced by the accumulation of person–situation interactions, reciprocal and transactive, over each person's history (see Brown & Campione, this volume). There is growing evidence that differentiated learning histories influence ability profile development (Balke-Aurell, 1982; Demetriou, Efklides & Platsidou, in press; Gustafsson, Demetriou & Efklides, 1989). A theory to that effect, though vague in detail, has long been in hand