CHAPTER I

FACTORS

1. *A* **factor** *is a number which will divide into another number an exact number of times.* Thus 3 is a factor of 15.

If the same factor will divide into two or more numbers, it is said to be a **common factor** of these numbers. Thus 4 is a common factor of 16 and 24.

Again considering these two numbers 16 and 24, we see that 8 is also a common factor. It is also the greatest factor of both numbers, it is therefore called the **highest common factor**, written H.C.F.

A **Prime Number** *is one whose only factors are itself and unity.* Thus 11, 13, 19, 23 are prime numbers. A **prime factor** is one which in itself is a prime number.

To find the H.C.F. of two or more numbers

(1) Find the prime factors of each number, (2) put down all the factors common to each number. The product of these common factors is the H.C.F. required.

EXAMPLE. Find the H.C.F. of 105, 180, 210.

$$105 = 3 \,.\, 5 \,.\, 7,$$
$$180 = 2 \,.\, 2 \,.\, 3 \,.\, 3 \,.\, 5,$$
$$210 = 2 \,.\, 3 \,.\, 5 \,.\, 7.$$

The factors that are common to these prime factors are 3 and 5. Therefore the H.C.F. is 15.

Exercises 1

Find the H.C.F. of:

1. 63, 147.
2. 98, 70.
3. 51, 57.
4. 12, 15, 30, 72.
5. 60, 105, 195, 210.
6. 140, 780, 550.
7. 120, 360, 480.
8. 210, 1155.
9. 462, 112.
10. 600, 336.
11. 420, 150, 630.
12. 171, 152, 133.

13. There are three rods, 3 ft. 4 in., 8 ft. 4 in. and 8 ft. 9 in. long respectively. What is the greatest common length that may be cut off

these rods an exact number of times? How many of these lengths will there be altogether?

14. A courtyard 30 ft. long and 25 ft. 6 in. broad is to be paved with square tiles. What will be the dimensions of the tiles so that the least number may be used?

MULTIPLES

2. *A number which contains another number an exact number of times is said to be a* **multiple** *of that number*. Thus 20 is a multiple of 2.

When a number contains two or more other numbers an exact number of times, it is said to be a **common multiple** of these numbers. Thus 20 is a common multiple of 2 and 5.

Again 10 is a common multiple of 2 and 5, and it is also the smallest or least number or multiple which exactly contains 2 and 5. It is therefore called the **least common multiple** of 2 and 5. **L.C.M.** denotes least common multiple.

To find the L.C.M. of two or more numbers

1. Write down prime factors of all the numbers.
2. Write down the prime factors of the largest number.
3. With these factors, place any factors of the other numbers not already there.
4. The product of the factors so obtained is the L.C.M. required.

EXAMPLE 1. Find the L.C.M. of 4, 12, 15.

(1)
$$15 = 3 \,.\, 5.$$
$$12 = 2 \,.\, 2 \,.\, 3.$$
$$4 = 2 \,.\, 2.$$

(2) Prime factors of largest number:
$$3 \,.\, 5.$$

(3) With factors in (2) place the factors of 12 and 4 not already there:
$$3 \,.\, 5 \,.\, 2 \,.\, 2 = 60.$$

$\therefore$ the L.C.M. of 4, 12, 15 is 60.

EXAMPLE 2. Find the L.C.M. of 8, 12, 15, 16:
$$8 = 2 \,.\, 2 \,.\, 2.$$
$$12 = 2 \,.\, 2 \,.\, 3.$$
$$15 = 3 \,.\, 5.$$
$$16 = 2 \,.\, 2 \,.\, 2 \,.\, 2.$$

Proceed as in Example 1:

$$2 \,.\, 2 \,.\, 2 \,.\, 2 \,.\, 3 \,.\, 5 = 240.$$

$\therefore$ the L.C.M. of 8, 12, 15, 16 is 240.

Exercises 2

Find the L.C.M. of the following:

1. 16, 24, 32.

2. 12, 16, 20.

3. 72, 135, 300.

4. 3, 12, 18, 36.

5. 7, 18, 21, 35.

6. 5, 15, 24, 32, 35.

7. Four bells start ringing together at 12 o'clock. They ring at intervals of 2, 6, 8 and 10 sec. How many times will they have rung together by 12.30?

8. Two spur wheels engage with each other. One has 56 teeth and the other 48. After how many revolutions of the smaller wheel will the same two teeth be in contact?

9. The carrier wheel of a bicycle is 16 in. in diameter, and the back wheel is 28 in. The lowest point of both tyres is marked. After how many revolutions will these two marks be on the ground again at the same time?

10. Three lighthouses flash at intervals of 15, 20 and 25 sec. respectively. How many times during an hour are the flashes seen simultaneously?

FRACTIONS

3. If a rod is divided into a number of equal parts, each part is called a **fraction** of the whole. Supposing it is divided into 8 parts, each part is called an eighth and is written $\frac{1}{8}$. Similarly 2 parts is written $\frac{2}{8}$. The figure above the horizontal line is called the **numerator**, and the figure below this line is referred to as the **denominator**. The denominator denotes how many equal parts the unit has been divided into, and the numerator indicates how many of those parts are being considered. The fraction $\frac{5}{16}$ means that some unit has been divided into 16 parts, and that 5 of those parts are being considered.

A **proper fraction** is one where the denominator is greater than the numerator. Thus $\frac{4}{7}$, $\frac{5}{9}$ are proper fractions.

An **improper fraction** is a fraction in which the denominator is less than the numerator, such as $\frac{15}{4}$, $\frac{12}{9}$. The fraction $\frac{15}{4}$ denotes

that some unit has been divided into four equal parts, and that a value equivalent to fifteen of these parts is considered.

A **mixed number** consists of a whole number and a fraction; for example $3\frac{3}{5}$, $2\frac{7}{9}$ are mixed numbers.

A unit may be expressed as a fraction, e.g. $\frac{5}{5}$, because this fraction denotes that something is divided into 5 equal parts, and 5 are taken, i.e. the whole is taken.

An improper fraction may be expressed as a mixed number. Thus $\frac{10}{3}=\frac{3}{3}+\frac{3}{3}+\frac{3}{3}+\frac{1}{3}=3\frac{1}{3}$. This result may be obtained by dividing the denominator into the numerator. Conversely, a mixed number may be expressed as an improper fraction by multiplying the whole number by the denominator of the fraction and adding in the numerator. Thus $5\frac{2}{3}=\frac{17}{3}$, $4\frac{3}{8}=\frac{35}{8}$. The reason for this process is easily seen.

Exercises 3

Express the following improper fractions as mixed numbers:

1. $\frac{45}{8}, \frac{23}{7}, \frac{17}{9}, \frac{12}{5}, \frac{67}{4}, \frac{38}{6}$.

2. $\frac{145}{18}, \frac{237}{23}, \frac{416}{19}, \frac{826}{41}, \frac{79}{17}$.

Change the following mixed numbers to improper fractions:

3. $9\frac{3}{8}, 17\frac{4}{7}, 6\frac{4}{15}, 21\frac{7}{12}, 15\frac{3}{4}$.

4. $10\frac{1}{11}, 19\frac{4}{13}, 25\frac{5}{7}, 14\frac{4}{9}, 18\frac{7}{10}$.

4. We know that to divide something into two parts and take one of them is the same as dividing it into four parts and taking two of them, or dividing it into eight parts and taking four.

$$\therefore \quad \tfrac{1}{2}=\tfrac{2}{4}=\tfrac{4}{8},$$

viz.
$$\frac{1}{2}=\frac{1\times 2}{2\times 2}=\frac{1\times 4}{2\times 4},$$

that is, **if we multiply the numerator and denominator of a fraction by the same number, the value of the fraction remains unaltered. The converse is equally true. That is, if the numerator and denominator of a fraction are divided by the same number its value remains unaltered.**

Thus
$$\frac{4}{8}=\frac{4\div 4}{8\div 4}=\frac{1}{2}.$$

When the numerator and denominator are made as small as

possible by dividing both by the same number, the fraction is said to be reduced to its lowest terms.

EXAMPLE. Reduce $\frac{36}{45}$ to its lowest terms.

We see that 36 and 45 are each divisible by 9.

$$\therefore \quad \frac{36}{45}=\frac{4}{5},$$

and, as nothing further will divide into both 4 and 5, $\frac{4}{5}$ is the lowest terms in which to express $\frac{36}{45}$.

Should a common factor not readily be seen, the H.C.F. of numerator and denominator should be found.

Exercises 4

Express the following fractions in their lowest terms, and where necessary as a mixed number:

1. $\frac{15}{63}, \frac{36}{60}, \frac{78}{15}, \frac{42}{189}$.
2. $\frac{144}{132}, \frac{78}{169}, \frac{85}{323}, \frac{253}{92}$.

ADDITION OF FRACTIONS

5. The sum of a number of fractions having the same denominator is found by adding their numerators together, e.g.

$$\frac{2}{9}+\frac{4}{9}+\frac{5}{9}+\frac{8}{9}=\frac{19}{9}=2\frac{1}{9},$$

just as 2 apples + 4 apples + 5 apples + 8 apples = 19 apples.

When the denominators are not the same, then the fractions cannot thus be added directly.

If the denominators are different they must be made the same before addition can take place.

EXAMPLE 1. $\frac{1}{10}+\frac{4}{5}$

cannot be added until both denominators are in the same terms.

Thus $\frac{4}{5}=\frac{8}{10}$.

$$\therefore \quad \frac{1}{10}+\frac{4}{5}=\frac{1}{10}+\frac{8}{10}=\frac{9}{10}.$$

To express a number of fractions having different denominators as having the same denominator, find the L.C.M. of the denominators. The L.C.M. thus found is the number in which all the denominators will be expressed. It is called the **common denominator**.

EXAMPLE 2. Add $\frac{3}{4}$, $\frac{5}{8}$, $\frac{7}{12}$.

The L.C.M. of 4, 8, 12 is 24. Therefore all the denominators must be 24.

$$\frac{3}{4}=\frac{18}{24};\ \frac{5}{8}=\frac{15}{24};\ \frac{7}{12}=\frac{14}{24}.$$

$$\therefore\quad \frac{3}{4}+\frac{5}{8}+\frac{7}{12}=\frac{18}{24}+\frac{15}{24}+\frac{14}{24}=\frac{47}{24}=1\frac{23}{24}.$$

EXAMPLE 3. Find the sum of $2\frac{5}{12}$, $3\frac{4}{15}$, $1\frac{1}{18}$.

The L.C.M. of 12, 15, 18 is 180.

$$\therefore\quad 2\frac{5}{12}+3\frac{4}{15}+1\frac{1}{18}=6+\frac{75}{180}+\frac{48}{180}+\frac{10}{180}=6\frac{133}{180}.$$

Exactly the same procedure is followed in subtraction of fractions.

EXAMPLE 4. From $5\frac{5}{12}$ take $2\frac{4}{15}$.

$$5\frac{5}{12}-2\frac{4}{15}=3\frac{5}{12}-\frac{4}{15}.$$

The L.C.M. of 12 and 15 is 60.

$$\therefore\quad 3\frac{5}{12}-\frac{4}{15}=3\frac{25}{60}-\frac{16}{60}=3\frac{9}{60}=3\frac{3}{20}.$$

EXAMPLE 5. From $7\frac{5}{18}$ take $3\frac{11}{24}$.

$$7\frac{5}{18}-3\frac{11}{24}=4\frac{5}{18}-\frac{11}{24}.$$

The L.C.M. of 18 and 24 is 72.

$$\therefore\quad 4\frac{5}{18}-\frac{11}{24}=4\frac{20}{72}-\frac{33}{72}.$$

Now we cannot subtract 33 from 20. We therefore have to subtract $\frac{33}{72}$ from one of the units in 4. It may thus be written

$$3+\frac{72}{72}+\frac{20}{72}-\frac{33}{72}=3+\frac{39}{72}+\frac{20}{72}=3\frac{59}{72}.$$

Exercises 5

1. Arrange in order of magnitude and add the least to the greatest:

$$\frac{1}{9},\ \frac{80}{81},\ \frac{4}{27},\ \frac{11}{12}.$$

2. $\frac{4}{5}+1\frac{2}{3}+1\frac{1}{12}-\frac{11}{20}$.

3. Find the overall lengths of the screwed bolts (or spindles) shown in Fig. 1 (*a*), (*b*), (*c*), (*d*).

4. $(4\frac{3}{8}+2\frac{1}{5})-(1\frac{11}{24}+3\frac{7}{12})$.

5. $1\frac{7}{15}+1\frac{9}{20}-2\frac{1}{24}$.

6. $(2\frac{1}{2}+3\frac{3}{4})-(4\frac{1}{16}-3\frac{1}{12})$.

7. $(\frac{5}{14}+6\frac{1}{2})-(3\frac{8}{21}+2\frac{10}{21})$.

8. $5\frac{3}{8}+7\frac{3}{10}-1\frac{3}{5}$.

9. $3\frac{8}{9}-(1\frac{3}{14}+\frac{5}{6}+\frac{4}{21})$.

10. By how much does the sum of $7\frac{3}{5}$ and $5\frac{3}{4}$ exceed their difference?

11. $(14\frac{1}{2}+9\frac{1}{8})-(25\frac{3}{4}-16\frac{1}{3})$.

12. $(\frac{3}{10}+\frac{1}{6}+1\frac{1}{15})-(\frac{1}{4}+\frac{5}{24}+\frac{1}{6})$.

13. The length of a belt is 40 yd. What length will remain when three pieces $4\frac{7}{8}$ yd., $10\frac{3}{4}$ yd. and $6\frac{5}{8}$ yd. have been cut off?

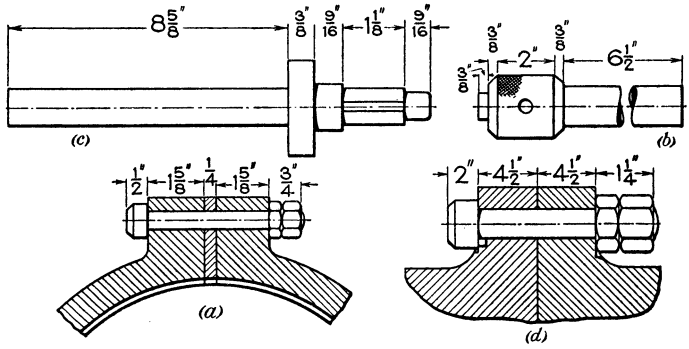

Fig. 1

14. Two towns are $15\frac{1}{4}$ miles apart. Two men start to walk towards each other from these towns. When they have walked $8\frac{3}{8}$ miles and $4\frac{2}{3}$ miles respectively, how far apart are they?

15. In an alloy of zinc, copper and tin three-fourths is copper, $\frac{1}{16}$ is tin and there are 48 lb. of zinc. Find the weight of each metal.

MULTIPLICATION OF FRACTIONS

6. If 3 is multiplied by 4 the result is 12,

written $3\times4=12$.

If we multiply three-sevenths by 4 we get twelve-sevenths,

written $\frac{3}{7}\times4=\frac{12}{7}$.

Therefore, to multiply a fraction by a whole number, we multiply the numerator by that number.

7. To multiply one fraction by another

$$\tfrac{2}{3}\times\tfrac{3}{4}.$$

This means that we require to find the value of $\frac{3}{4}$ of $\frac{2}{3}$.

Now $\quad \frac{1}{4}$ of $\frac{1}{3}=\frac{1}{12}$,

and $\quad \frac{1}{4}$ of $\frac{2}{3}=\frac{2}{12}$.

$\therefore \quad \frac{3}{4}$ of $\frac{2}{3}=\frac{2}{12}\times 3=\frac{6}{12}=\frac{1}{2}$,

that is, the value of $\frac{2}{3}$ of $\frac{3}{4}$ has been obtained by multiplying the two numerators together for the final numerator, and the two denominators together for the final denominator.

That is,
$$\frac{2}{3}\times\frac{3}{4}=\frac{2\times 3}{3\times 4}=\frac{6}{12}=\frac{1}{2}.$$

8. If any numerator and any denominator contain a common factor they may be divided by this factor. Thus, in the foregoing example, 3 is a common factor of a numerator and of a denominator, and 2 is also a common factor of the other numerator and the other denominator. We therefore successively divide by these common factors:

$$\frac{\overset{1}{\cancel{2}}}{\underset{1}{\cancel{3}}}\times\frac{\overset{1}{\cancel{3}}}{\underset{2}{\cancel{4}}}=\frac{1\times 1}{1\times 2}=\frac{1}{2}.$$

This is called **cancelling**.

The foregoing may also be proved by means of a diagram.

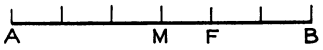

Fig. 2

Draw a line AB 6 units long. Mark off the units.

Now $\quad AF=\frac{2}{3}$ of AB,

and $\quad AM=\frac{3}{4}$ of AF,

$\quad =\frac{3}{4}$ of $\frac{2}{3}$ of AB.

But as shown $\quad AM=\frac{1}{2}$ of AB.

$\therefore \quad \frac{3}{4}$ of $\frac{2}{3}=\frac{1}{2}$.

9. To divide one fraction by another fraction.

To divide a fraction by a whole number we simply divide the numerator by that number.

Example: $\frac{10}{4} \div 2 = \frac{5}{4}$; $\frac{15}{3} \div 3 = \frac{5}{3}$.

But exactly the same result will be obtained if we multiply the denominator by the dividing number.

Thus $\frac{10}{4} \div 2 = \frac{10}{8} = \frac{5}{4}$,

and $\frac{15}{3} \div 3 = \frac{15}{9} = \frac{5}{3}$.

Now suppose we require to divide $\frac{10}{4}$ by $\frac{5}{2}$. If we divide by 5, by multiplying the denominator 4 by 5, we get a result only half what it should be,

viz. $\frac{10}{4} \div 5 = \frac{10}{20}$.

In order to get the correct result we shall have to multiply $\frac{10}{20}$ by 2. So now what really has happened is that the original fraction which was to be divided by $\frac{5}{2}$ has been multiplied by $\frac{2}{5}$. From this we get the general rule for dividing a fraction by a fraction. **To divide a fraction by a fraction invert the divisor and multiply by the fraction thus obtained.**

EXAMPLE 1. $$\frac{5}{8} \div \frac{7}{16} = \frac{5}{\cancel{8}_{1}} \times \frac{\cancel{16}^{2}}{7} = \frac{10}{7} = 1\frac{3}{7}.$$

In all questions of division and multiplication of fractions mixed numbers must be expressed as improper fractions.

EXAMPLE 2. $$2\frac{1}{7} \div 2\frac{13}{21}$$
$$= \frac{15}{7} \div \frac{55}{21}$$
$$= \frac{\cancel{15}^{3}}{\cancel{7}_{1}} \times \frac{\cancel{21}^{3}}{\cancel{55}_{11}}$$
$$= \frac{9}{11}.$$

Exercises 6

1. $\frac{7}{16} \times \frac{32}{35} \times \frac{5}{8}$.

2. $3\frac{1}{2} \times \frac{4}{7} \times 3\frac{1}{16}$.

3. $2\frac{1}{4} \times 18\frac{2}{3} \times 2\frac{5}{8} \times \frac{1}{18}$.

4. $(1\frac{2}{3} + \frac{4}{5} - 1\frac{8}{9}) \times (\frac{1}{4} - \frac{1}{13})$.

5. $(\frac{2}{3} + \frac{3}{5}) \times (1\frac{2}{3} - \frac{5}{12})$.

6. $2\frac{2}{3} \div 24\frac{8}{9}$.

7. $\frac{11}{20} \div \frac{11}{18}$.

8. $\frac{9}{64} \div (\frac{5}{8} \times \frac{3}{5})$.

9. $19\frac{3}{5} \times 4\frac{1}{6} \div 4\frac{1}{12}$.

10. $4\frac{3}{10} \div (7\frac{1}{6} \times \frac{4}{5})$.

10. When a number of fractions are joined together by different signs, those connected by the signs of multiplication or division are evaluated before those connected by the signs of addition or subtraction, **that is, the signs of multiplication and division bind more closely than the signs of addition and subtraction.**

However, should any of the fractions be enclosed in brackets, then these fractions inside the brackets must first be evaluated no matter what sign connects the brackets to another fraction.

EXAMPLE 1.

$$\frac{3}{4}\times\frac{16}{21}-\frac{3}{14}.$$

$$\frac{\overset{1}{\cancel{3}}}{\underset{1}{\cancel{4}}}\times\frac{\overset{4}{\cancel{16}}}{\underset{7}{\cancel{21}}}=\frac{4}{7}.$$

$$\therefore\quad \frac{4}{7}-\frac{3}{14}=\frac{5}{4}=1\frac{1}{4}.$$

EXAMPLE 2.

$$2\frac{1}{4}+3\frac{1}{5}\div\frac{12}{25}.$$

$$3\frac{1}{5}\div\frac{12}{25}=\frac{\overset{4}{\cancel{16}}}{\underset{1}{\cancel{5}}}\times\frac{\overset{5}{\cancel{25}}}{\underset{3}{\cancel{12}}}=\frac{20}{3}=6\frac{2}{3}.$$

$$\therefore\quad 2\frac{1}{4}+6\frac{2}{3}=8\frac{11}{12}.$$

EXAMPLE 3.

$$\left(\frac{2}{3}+4\frac{7}{12}\right)\times\frac{12}{35}-\frac{7}{10}.$$

$$\frac{2}{3}+4\frac{7}{12}=5\frac{1}{4}.$$

$$5\frac{1}{4}\times\frac{12}{35}=\frac{\overset{3}{\cancel{21}}}{\underset{1}{\cancel{4}}}\times\frac{\overset{3}{\cancel{12}}}{\underset{5}{\cancel{35}}}=\frac{9}{5}=1\frac{4}{5}.$$

$$\therefore\quad 1\frac{4}{5}-\frac{7}{10}=1\frac{1}{10}.$$

Exercises 7

1. $\frac{2}{3}+\frac{3}{5}$ of $1\frac{2}{3}-\frac{5}{12}$.

2. $7\frac{1}{2}-3\frac{1}{3}\div\frac{8}{15}$.

3. $\frac{5}{8}$ of $\frac{14}{15}-\frac{3}{4}$ of $\frac{5}{9}$.

4. $\frac{3}{7}\div1\frac{13}{14}+3\frac{1}{8}\times\frac{24}{35}$.