THE NEWER ALCHEMY

In this lecture I shall give a brief account of modern work on the transmutation of the elements. The title is intended to suggest a contrast to that ancient form of alchemy which had such an extraordinary fascination for the human mind for nearly two thousand years. The belief in the possibility of the transmutation of matter arose early in the Christian Era. The search for the Philosopher's Stone to transmute one element into another, and particularly to produce gold and silver from the common metals, was unremittingly pursued in the Middle Ages. The existence of this idea through the centuries was in no small part due to a philosophic conception of the nature of matter which was based on the authority of Aristotle. On this view, all bodies were supposed to be formed of the same primordial substance, and the four elements, earth, air, fire and water, differed from one another only in possessing to different degrees the qualities of cold, wet, warm and dry. By adding or subtracting the degree of one or more of these

qualities, the properties of the matter should be changed. To the alchemists, imbued with these conceptions, it appeared obvious that one substance could be transmuted into another if only the right method could be found. In the early days of Chemistry, when the nature of chemical combination was little understood, the marked alteration of the appearance and properties of substances by chemical action gave support to these views. From time to time there arose a succession of men who claimed to have discovered the great secret, but we have the best reasons for believing that not a scintilla of gold was ever produced. When we look back from the standpoint of our knowledge to-day, we see that transmutation was a hopeless quest with the very limited facilities then at the disposal of the experimenters. With the development of experimental science and the steady growth of chemical knowledge, the ideas of transmutation were gradually discarded and ceased to influence the main advance of knowledge. At the same time these old alchemistic ideas have persisted in the public mind, and even to this day impostors or deluded men appear who claim to have a recipe for making gold in quantity by

transmutation. These charlatans are often so convincing in their scientific jargon that they disturb for a time the sleep of even our most hard-headed financiers. We shall see that it is now possible by modern methods to produce exceedingly minute quantities of gold, but only by the transmutation of an even more costly element, platinum.

As the knowledge of Chemistry grew the old idea of transmutation was seen to be untenable. It was found that matter could be resolved into eighty or more distinct elements, the atoms of which appeared to be permanent and indestructible. The ordinary physical and chemical forces then at our command appeared to be unable to alter in any way the atoms of the elements. This idea of the permanency of the atoms received a rude shock when it was found in 1902 that the atoms of two well-known elements, uranium and thorium, were undergoing a veritable process of spontaneous transformation, although at a very slow rate. This conclusion followed from the discovery of the radioactivity of these two heavy elements which spontaneously emit penetrating types of radiation capable of blackening photographic plates

and discharging an electrified body. This radioactivity is a sign of the instability of the atoms concerned. Occasionally an atom breaks up spontaneously with explosive violence hurling from it either a fast α- or β-particle. The α-particle is a charged atom of helium of mass 4 which is shot out at a speed of about 10,000 miles per second. The β-particle, which is another name for the light negative electron, is generally expelled with a much higher speed. Sometimes a penetrating radiation of the X-ray type, known as the γ-rays, accompanies the transformation.

RADIOACTIVE TRANSFORMATIONS

If we take a gram of the element uranium, about 24,000 atoms break up per second with the emission of an α-particle. Yet the number of atoms in a gram is so great, that it would take about 4500 million years before half of the atoms are transformed. As a result of the emission of an α-particle of mass 4 from the uranium atom of weight 238, a new atom is formed of atomic mass 234. The atoms of this new element are very unstable and break up rapidly with the emission of a swift β-particle from each atom.

This process of transformation, once started, continues through a succession of stages, each unstable atom giving rise to another. The well-known element radium has its origin from the transformation of uranium, and is the fifth product in the series.

The activity of a radioactive body, measured by the specific radiation it emits, diminishes with time according to a geometrical progression. If the activity falls to 1/2 in a time T, known as the half-period, it falls to 1/4 in a time $2T$, to 1/8 in a time $3T$, and so on. It can readily be calculated that in a time $20T$ the activity has decreased to less than one-millionth of the initial value. This law of decay holds universally for all radioactive bodies; but the half-period T, which has a characteristic value for each active body, varies enormously for different substances. For example, the half-period of uranium is 4500 million years and for radium 1600 years, but is only one-millionth of a second for one of the products of radium known as radium C′. This law of decay is an expression of the fact that the number of atoms breaking up in unit time is on the average always proportional to the number of unchanged atoms present. Such a result is to

be expected if the individual atoms break up according to the laws of chance.

The wonderful sequence of transformations which occur in uranium is shown in Fig. 1, where the circles represent the nuclei of the successive atoms which are formed. The half-period of transformation is added below, while the nature of the particle expelled, whether α or β, is indicated. It would take too long to discuss the methods by which this sequence of changes has been definitely established, but attention should be drawn to the extraordinary simplicity of the relations which connect together the whole series of transformations.

We now know that the chemical properties of an element are defined by its atomic number, which also represents the number of natural units of charge on the atomic nucleus. Since electricity is atomic in character, the nuclear charge is always given by a whole number, which varies from 1 for the lightest nucleus, hydrogen, to 92 for the heaviest element, uranium. The atomic number of each nucleus and also its atomic mass in terms of $O = 16$ are shown within the circles

The α- or β-particle which is liberated has its

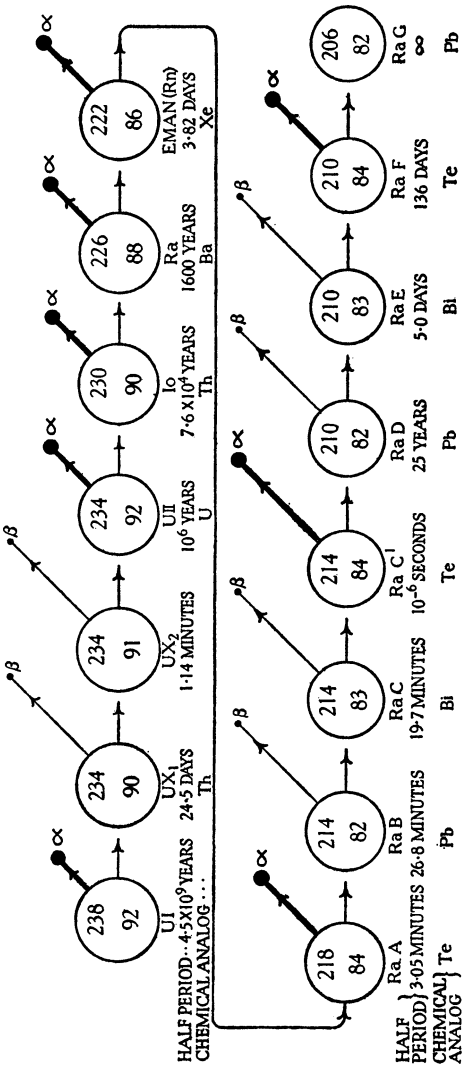

Fig. 1. Uranium series of elements. The upper number in each circle gives the atomic mass, the lower the atomic number and nuclear charge. The length of the broad arrow shows the relative distance of travel of the α-particles.

origin in the nucleus itself. The expulsion of an α-particle, which carries two positive units of charge and has a mass 4, thus lowers the atomic number of the residual nucleus by two units and its mass by four units. On the other hand, the expulsion from the nucleus of a β-particle which carries a unit charge of negative electricity raises the nuclear charge by one unit. On account of the very light mass of the β-particle, the mass of the resulting atom is to a first approximation unchanged. These simple considerations based on the nature of the radiation emitted serve to explain in a satisfactory way the atomic number and mass of all the elements in the long sequence. It is now well established that mass and energy are equivalent. Knowing the precise mass of the α-particle (helium nucleus) and the maximum kinetic energy of the expelled α- or β-particle, it is possible to calculate exactly the atomic masses of all the atoms in the series provided the atomic mass of uranium is known. The end product of the series, which shows no trace of activity, has the same atomic number as lead, but its atomic mass 206 differs from that of ordinary lead 207·2.

It is now well known that the majority of the

elements consist of a mixture of isotopes, i.e. of atoms which have the same nuclear charge but different masses. Aston has shown that ordinary lead is made up of at least three isotopes of atomic masses 206, 207 and 208, of which the mass 206 is the most abundant. The final product of the uranium series, generally known as uranium-lead, is thus one of the isotopes (206) of ordinary lead. The lead separated from an old uranium mineral mainly consists of this lead isotope 206. It will be noticed also that two radioactive isotopes of lead, atomic number 82, appear in the series, viz. radium B of mass 214 and radium D of mass 210.

It should be mentioned that a similar long sequence of transformations is shown in the elements thorium and actinium. The end product of thorium is again an isotope of lead, but of mass 208 instead of 206 as in the case of uranium-lead. The lead separated from a pure thorium mineral mainly consists of the 208 isotope. The end product of the actinium series of transformations is also an isotope of lead but of mass 207. It is a striking fact that the final product of the transformation of all three series

is in each case an isotope of lead but of different atomic mass.

The remarkable changes in the chemical and physical properties of successive radioactive elements is well illustrated by the transformation of radium. In the pure state, the element radium is a metal with chemical properties resembling those of barium. It breaks up with the emission of α-particles with a half-period of 1600 years, and gives rise to a heavy radioactive gas, the radium emanation, now called radon. This gas is chemically inert, and in this respect belongs to the well-known group of inert gases of which helium, neon and argon are examples. The atoms of the emanation are very unstable compared with those of radium, half of them breaking up in 3·8 days. The intense radioactivity of this gas can be illustrated by a simple experiment. A minute volume of the gas, less than 1/10 cubic millimetre at ordinary pressure, is allowed to enter an exhausted glass vessel coated with phosphorescent zinc sulphide. At once the vessel is seen to glow brilliantly, due to the intense bombardment of the zinc sulphide by the vast number of α-particles shot out from the emanation as it breaks up.