CAMBRIDGE

Cambridge University Press
978-0-521-31994-2 - Response and Stability: An Introduction to the Physical Theory
A. B. Pippard
Excerpt
More information

1

The harmonic oscillator

You will, of course, already know something of simple harmonic motion, but a little revision will do no harm, and how better than by solving a few problems? But first let us remind ourselves that the characteristic differential equation for the simplest possible form of oscillator is

$$\ddot{x}+\omega_0^2 x=0. \tag{1.1}$$

A mass m hanging on a spring obeys this equation. If (a) in fig. 1.1 represents the mass in equilibrium, when it is pulled downwards a distance y it will experience a restoring force, in the upward direction, proportional to y, μy say. Then the equation of motion is

$$m\ddot{y}=-\mu y,$$

having the same form as (1.1) if $(\mu/m)^{\frac{1}{2}}=\omega_0$, the angular frequency of vibration. Similarly if q is the charge on the capacitor in fig. 1.1(c), and i the current,

$$\dot{q}=i.$$

Also the potential drop in a clockwise direction is q/C across C and $L\,\mathrm{d}i/\mathrm{d}t$, i.e. $L\ddot{q}$ across L. Since there must be no change of potential going round the circuit,

$$L\ddot{q}+q/C=0, \tag{1.2}$$

giving, by comparison with (1.1), a frequency $\omega_0=(LC)^{-\frac{1}{2}}$.

The general solution of (1.1) may be conveniently expressed in terms of complex numbers:

$$x=Ae^{i\omega_0 t}+Be^{-i\omega_0 t}, \text{ in which } A \text{ and } B \text{ are complex.}$$

If x is to represent a real physical quantity, A and B must be chosen so that x is real for all t, i.e. $x^*=x$. Thus

$$(A-B^*)e^{i\omega_0 t}+(A^*-B)e^{-i\omega_0 t}=0,$$

which can be true at all times only if $B^*=A$. The most general real solution

© Cambridge University Press www.cambridge.org

CAMBRIDGE

Cambridge University Press
978-0-521-31994-2 - Response and Stability: An Introduction to the Physical Theory
A. B. Pippard
Excerpt
More information

of (1.1) is therefore $Ae^{i\omega_0 t}$ + complex conjugate, or 2 Re $(Ae^{i\omega_0 t})$. Obviously the factor 2 can be incorporated in A.

The complex, time-dependent quantities $Ae^{i\omega_0 t}$ and $A^*e^{-i\omega_0 t}$ are represented on the Argand diagram as two vectors of length $|A|$ rotating anticlockwise and clockwise respectively with angular frequency ω_0. They are shown in fig. 1.2 at the instant $t=0$, and their sum lies on the real axis,

Fig. 1.1. A mass m, hanging from a spring, is displaced from equilibrium (a) downwards a distance y (b) and released. A loss-free LC circuit (c) carries a charge $\pm q$ on the capacitor plates, and a current i.

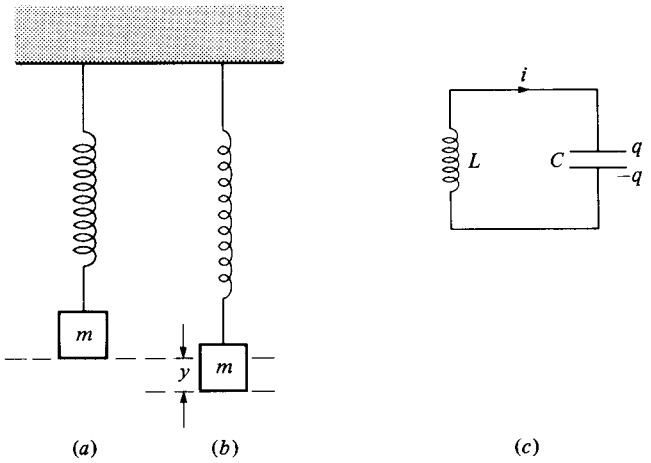

Fig. 1.2. The rotating vector $Ae^{i\omega t}$ and its complex conjugate $A^*e^{-i\omega t}$.

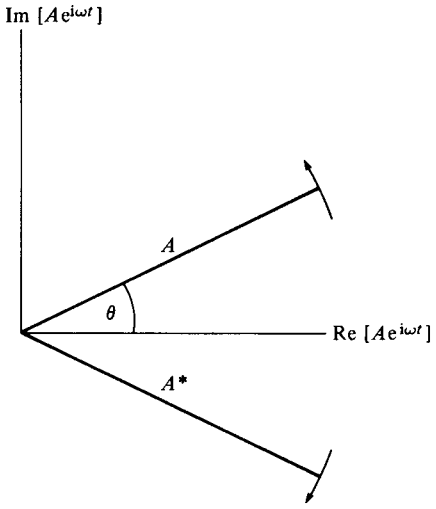

© Cambridge University Press www.cambridge.org

CAMBRIDGE

Cambridge University Press
978-0-521-31994-2 - Response and Stability: An Introduction to the Physical Theory
A. B. Pippard
Excerpt
More information

being twice the projection of either onto that axis. When A is real the vibration is at its positive extreme at $t=0$, while when A is positive imaginary the vibration is at its central position, passing through it from positive to negative with a velocity $-\omega_0|A|$. If we express A as $|A|e^{i\theta}$, the vibration of the co-ordinate x takes the form

$$x = 2\,\mathrm{Re}\,(|A|e^{i(\omega_0 t+\theta)}) \quad \text{or} \quad 2\,\mathrm{Re}\,(|A|e^{-i(\omega_0 t+\theta)}),$$
$$= 2|A|\cos(\omega_0 t+\theta),$$

θ being seen as a phase advance relative to the 'standard' vibration $\cos\omega_0 t$. It does not matter whether one uses $e^{i\omega_0 t}$ or $e^{-i\omega_0 t}$ as the complex expression of a real vibration, provided one is consistent during the course of a calculation. I shall use both, more or less indiscriminately, as the whim takes me.

Determining the vibration frequency

The values of ω_0 for the simple examples in fig. 1.1 were found by writing the differential equation for one co-ordinate. Another method which is often useful depends on the fact that for loss-free simple harmonic motion (but for no other), any variable vibrating with amplitude a passes through its equilibrium position with velocity $\omega_0 a$. At this instant the energy of the system, measured from the equilibrium state of rest, is entirely kinetic; on the other hand, a quarter of a cycle later the variable is stationary at its greatest extent and the energy is entirely potential. The frequency may be found by writing down the condition that the energy is the same in the two states. Thus to depress the mass in fig. 1.1 through a height a work $\frac{1}{2}\mu a^2$ must be done, and this is the potential energy of the mass and the total energy if it is at rest. On being released it vibrates with frequency ω_0 and passes through the equilibrium position with kinetic energy $\frac{1}{2}m\omega_0^2 a^2$. For these two energies to be equal, $\mu = m\omega_0^2$, giving $\omega_0 = (\mu/m)^{\frac{1}{2}}$ as before.

Exercise 1.1. Show in the same way that a simple pendulum of length l has $\omega_0 = (g/l)^{\frac{1}{2}}$. The potential energy here is gravitational.

Exercise 1.2. Use an analogous method to show that the circuit of fig. 1.1(*c*) has frequency $(LC)^{-\frac{1}{2}}$. Note that if q is the maximum charge on the capacitor, the current one-quarter cycle later is $\omega_0 q$.

The next three examples should be solved both by the energy method and by direct analysis of forces and accelerations.

© Cambridge University Press www.cambridge.org

CAMBRIDGE

Cambridge University Press
978-0-521-31994-2 - Response and Stability: An Introduction to the Physical Theory
A. B. Pippard
Excerpt
More information

Exercise 1.3. A diatomic molecule may be thought of, for some purposes, as two atoms of mass m_1 and m_2 held a certain distance apart in equilibrium by forces that behave, for small displacements, like a spring of spring constant μ. Show that the vibration frequency is $[\mu_0(1/m_1 + 1/m_2)]^{\frac{1}{2}}$.

Exercise 1.4. In fig. 1.3 the pulley A turning smoothly on a 130
horizontal axle is light but has a heavy semicircular rim B, of mass M. A string passing round the pulley carries a mass m. Draw a graph showing how the frequency of small vertical oscillations of m depends on the value of m. Make sure you understand why there is a critical mass m_c at which the behaviour changes. What happens when $m > m_c$? Show that near the critical point $\omega_0 \propto (m_c - m)^{\frac{1}{4}}$.

Exercise 1.5. A light cylinder has a heavy mass attached within it as shown in fig. 1.4. What is the frequency of small amplitude rolling oscillations if there is no slipping? It is helpful to remember that the point of contact with the surface is the instantaneous centre of rotation. If the contact could be made frictionless, what would the frequency be?

Exercise 1.6. This is somewhat similar to Ex. 1.5, and it is more
important to examine the critical behaviour than to calculate the 132
frequency. The long plank shown in fig. 1.5 has its centroid at C

Fig. 1.3. The mass m displaces the pulley to a new equilibrium position at θ, about which it can execute small oscillations.

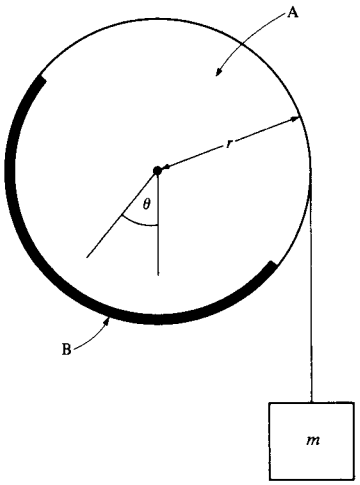

© Cambridge University Press www.cambridge.org

CAMBRIDGE

Cambridge University Press
978-0-521-31994-2 - Response and Stability: An Introduction to the Physical Theory
A. B. Pippard
Excerpt
More information

and rests on a cylinder. Show that the frequency of rocking motion goes to zero when R is reduced to equal H. If $R = H + x$, show that $\omega \propto x^{\frac{1}{2}}$ when x is small (cf. Ex. 1.4).

Lossy vibrators

If a resistor R is inserted in the circuit of fig. 1.1(c), an extra term $R\dot{q}$, appears on the left-hand side:

$$L\ddot{q} + R\dot{q} + q/C = 0,$$

a special case of the equation

$$\ddot{x} + 2\lambda\dot{x} + \omega_0^2 x = 0. \tag{1.3}$$

This is a linear differential equation, containing no powers of x, $\dot{x}$, $\ddot{x}$, etc., and no constant term, and the coefficients are constants. All such

Fig. 1.4. The dark circle represents a heavy mass firmly attached within a light cylinder. The whole executes rolling oscillations.

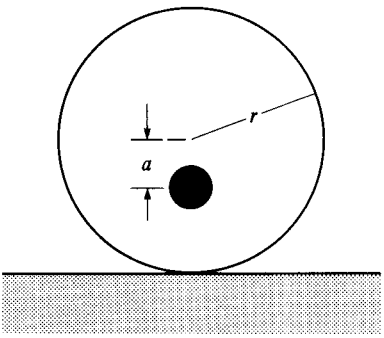

Fig. 1.5. A plank resting on a cylinder.

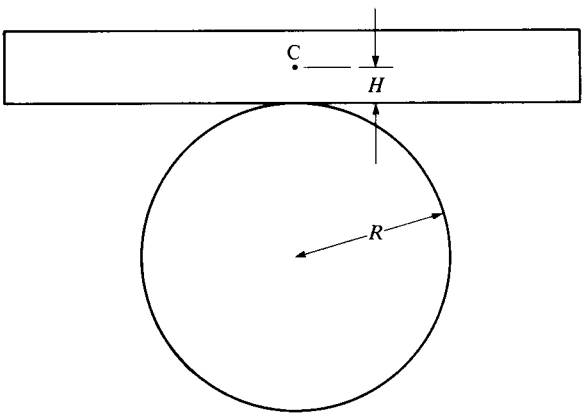

© Cambridge University Press www.cambridge.org

CAMBRIDGE

Cambridge University Press
978-0-521-31994-2 - Response and Stability: An Introduction to the Physical Theory
A. B. Pippard
Excerpt
More information

equations have exponential solutions. When $x = e^{pt}$ is substituted as a trial solution, $d^n x/dt^n = p^n x$ and an algebraic equation for p results. In this case

$$p^2 + 2\lambda p + \omega_0^2 = 0,$$

with two independent solutions,

$$p = -\lambda \pm (\lambda^2 - \omega_0^2)^{\frac{1}{2}}. \tag{1.4}$$

If $\lambda > \omega_0$ the solutions are non-oscillatory, but if $\omega_0 > \lambda$, the term $(\lambda^2 - \omega_0^2)^{\frac{1}{2}}$ is imaginary, meaning that the system oscillates with frequency $(\omega_0^2 - \lambda^2)^{\frac{1}{2}}$, but the oscillation decays as $e^{-\lambda t}$.

Exercise 1.7. On an Argand diagram plot how p varies as λ changes. Although at present we are not concerned with negative values of λ, let it run between $\pm\infty$. There are several points to note, and to prove if you can from (1.3):

(a) So long as p has an imaginary part, the two solutions for a given λ are complex conjugates. Hence show how to write down a real solution.

(b) Show also that the values of p lie on a circle of radius ω_0.

(c) But if p is real ($\lambda > \omega_0$), one solution lies inside the circle and one outside; $p_1 p_2 = \omega_0^2$.

(d) If the oscillator is held at rest, distant x_0 from the centre, and let go, derive an expression for its subsequent motion. Taking $\lambda = \frac{1}{10}\omega_0$, sketch the solution.

(e) Suppose in (d) the oscillator swings through zero but only rises to a peak of $x_0/100$ on the other side, what is now the value of λ? Find the point on the Argand diagram corresponding to this behaviour. Are you surprised how far it is from the point of critical damping, $\lambda = \omega_0$, above which there are no oscillations?

(f) An overdamped system, with two real values of p, p_1 and p_2, is initially at rest when it is struck sharply to give it a velocity v_0. Find and sketch the solution that satisfies the initial conditions $x = 0, \dot{x} = v_0$. Note that it is the larger p that dominates at first, but the smaller p that determines the long-term behaviour.

According to (1.4) a damped oscillator has an amplitude that decays as $e^{-\lambda t}$:

$$x = x_0 e^{-\lambda t} e^{i\omega' t}, \quad \text{where} \quad \omega' = (\omega_0^2 - \lambda^2)^{\frac{1}{2}}.$$

The energy is proportional to the square of the amplitude, i.e. to $(x_0 e^{-\lambda t})^2$ and decays as $e^{-2\lambda t}$. The time constant τ_a during which the amplitude decays by a factor e is $1/\lambda$, twice as great as the time constant for the decay

© Cambridge University Press www.cambridge.org

CAMBRIDGE

Cambridge University Press
978-0-521-31994-2 - Response and Stability: An Introduction to the Physical Theory
A. B. Pippard
Excerpt
More information

of energy, $\tau_e = 1/2\lambda$. The *quality factor*, Q, is defined as $\omega'\tau_e$; it is the number of radians of oscillation required for the energy to fall by a factor e.

If the damping is small, one may calculate it by estimating the dissipation directly. Thus for the LCR circuit one assumes a current $i = i_0 \cos \omega_0 t$, where $\omega_0 = (LC)^{-\frac{1}{2}}$. The instantaneous rate of dissipation is Ri^2, i.e. $Ri_0^2 \cos^2 \omega_0 t$, and, since the mean value of $\cos^2 \theta$ is $\frac{1}{2}$, the mean rate of dissipation is $\frac{1}{2}Ri_0^2$. Now the energy of the oscillation, $E = \frac{1}{2}Li_0^2$, so that $\dot{E} = -(R/L)E$. This equation has the solution $E = E_0 e^{-\mu t}$, where $\mu = R/L$. The time constant τ_e is consequently L/R, or $1/2\lambda$, as already found, since $R/L = 2\lambda$.

This device becomes useful when the damping is non-linear. It is perhaps not always appreciated that the model equation (1.3) is rarely realized in practice except for electrical circuits. When a pendulum swings in air it usually moves too fast for streamline motion, and when a turbulent wake accompanies the pendulum bob the frictional force varies with v according to a law lying somewhere between v and v^2. It is usually not possible to solve a differential equation like (1.3) in closed form if the middle term is a power or other non-linear function of x, and the calculation of dissipation is the most practicable way of finding how the oscillation decays. The method is reliable so long as the frictional term is not so strong as to distort the sinusoidal motion significantly.

Exercise 1.8. Consider a damped mechanical oscillator obeying the equation

$$m\ddot{x} + f(\dot{x}) + \mu x = 0,$$

in which $f(\dot{x})$ is:

(a) a constant retarding force (i.e. in the opposite direction to $\dot{x}$), such as is produced by sliding friction,

(b) a retarding force proportional to $\dot{x}^2$,

(c) a retarding force of the form $a|\dot{x}| + b\dot{x}^2$.

The curves in fig. 1.6 represent these three cases. You should be able to identify which belongs to each of the three friction laws without calculation, but it is worth calculating one or two cases anyway.

The constant frictional force (case (a)) when inserted as $c\dot{x}/|\dot{x}|$ instead of $2\lambda\dot{x}$ in (1.3) allows an explicit solution. See if you can find it, and compare the pattern of decay with that derived from the dissipation.

© Cambridge University Press www.cambridge.org

CAMBRIDGE

Cambridge University Press
978-0-521-31994-2 - Response and Stability: An Introduction to the Physical Theory
A. B. Pippard
Excerpt
More information

Driven harmonic oscillator

When a force proportional to cos ωt is applied to an oscillator obeying (1.3), the equation of motion takes the form

$$\ddot{x}+2\lambda\dot{x}+\omega_0^2 x=\mathrm{Re}\,(f\mathrm{e}^{\mathrm{i}\omega t});$$

alternatively expressed, the solution is the real part of the solution of

$$\ddot{x}+2\lambda\dot{x}+\omega_0^2 x=f\mathrm{e}^{\mathrm{i}\omega t}. \tag{1.5}$$

The general solution can be expressed as a transient term which is $A\mathrm{e}^{p_1 t}+B\mathrm{e}^{p_2 t}$, as if there were no driving force, to which must be added any solution of (1.5). Such a solution is found by substituting $x=x_0\mathrm{e}^{\mathrm{i}\omega t}$. Then

$$(-\omega^2+2\mathrm{i}\omega\lambda+\omega_0^2)x_0=f, \quad \text{and } x_0 \text{ is found.}$$

For the moment we shall ignore the transient terms and concentrate on the steady state response 45

$$x=f\mathrm{e}^{\mathrm{i}\omega t}/(\omega_0^2-\omega^2+2\mathrm{i}\omega\lambda). \tag{1.6}$$

Now it will be observed that the denominator vanishes when

$$\omega_0^2-\omega^2+2\mathrm{i}\omega\lambda=0, \tag{1.7}$$

that is, when ω is one of the solutions, ω_1 or ω_2, which are the complex frequencies of free oscillation (cf. the solution of (1.3)). Hence the denominator may be factorized as $-(\omega-\omega_1)(\omega-\omega_2)$, and the steady state solution (1.6) takes the form

$$\begin{aligned} x&=-f\mathrm{e}^{\mathrm{i}\omega t}/(\omega-\omega_1)(\omega-\omega_2)\\ &=\frac{f\mathrm{e}^{\mathrm{i}\omega t}}{\omega_1-\omega_2}\left[\frac{1}{\omega_1-\omega}-\frac{1}{\omega_2-\omega}\right]. \end{aligned} \tag{1.8}$$

In general, both terms in the square brackets must be retained. The frequencies, ω_1 and ω_2, of free oscillation have the same positive imaginary part, describing the decay of oscillation, and the real parts are equal and opposite, as illustrated on the Argand diagram of fig. 1.7(*a*). The two denominators are also shown, and it is clear that when Im $[\omega_{1,2}]$ is small the contribution of $(\omega_1-\omega)^{-1}$ is overwhelming in the vicinity of resonance.

Exercise 1.9. Show that if ω is real, $(\omega_1-\omega)^{-1}$ lies on a circle of diameter 1/Im $[\omega_1]$, as in fig. 1.7(*b*).

Fig. 1.6. Which of these tracings of damped oscillations corresponds to which of the three forms of frictional force in Ex. 1.8?

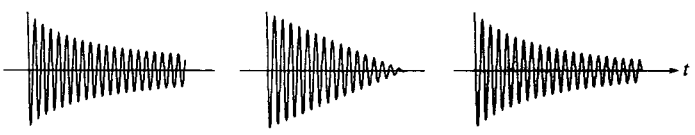

© Cambridge University Press www.cambridge.org

CAMBRIDGE

Cambridge University Press
978-0-521-31994-2 - Response and Stability: An Introduction to the Physical Theory
A. B. Pippard
Excerpt
More information

This illustrates the resonant response, both in amplitude and phase, the phase angle of $(\omega_1 - \omega)^{-1}$ being equal and opposite to that of $\omega_1 - \omega$. As ω runs from 0 to ∞, the response traverses the greater part of the circle and the phase of response changes through very nearly π.

The sharp resonant response of a low-loss system is called *Lorentzian*. If the second term in (1.8) is ignored, and (1.7) used to give the approximate solution (for small λ, $\omega_1 \approx \omega_0 + i\lambda$) the amplitude of response is seen to be

$$x \approx (-f/2\omega_0)/(\Delta\omega - i\lambda), \quad \text{where } \Delta\omega = \omega - \omega_0. \tag{1.9}$$

At low driving frequencies, $\Delta\omega < 0$ and $|\Delta\omega| \gg \lambda$; the response is in phase with the force, showing that the inertia of the vibrating object is unimportant, and the applied force serves to displace it against the restoring force. At high driving frequencies, $\Delta\omega$ is large and positive; the restoring force is of small importance and it is the inertia that must be overcome. At resonance, displacement and force are in phase quadrature, and the force is in phase with the velocity of the driven system. This allows the maximum rate of energy input to make up for the dissipation which of course is greatest at the resonant peak.

If we are concerned only with the magnitude of the response, and not with its phase, it is convenient to introduce the *intensity*, W, of response, defined as xx^*, the square of the amplitude. For Lorentzian response,

$$W = W_0/(\Delta\omega^2 + \lambda^2), \tag{1.10}$$

Fig. 1.7. (*a*) ω_1 and ω_2 on an Argand diagram. (*b*) $\omega_1 - \omega$ and $(\omega_1 - \omega)^{-1}$. As $\omega_1 - \omega$ traverses a horizontal line, its reciprocal traverses the circle.

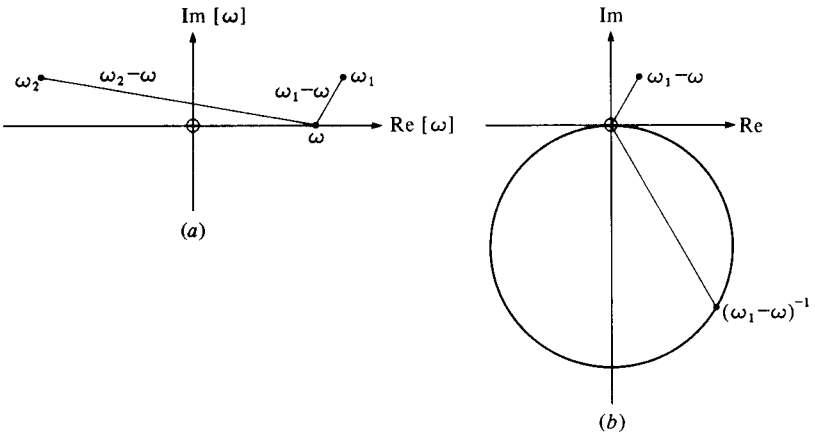

© Cambridge University Press www.cambridge.org

CAMBRIDGE

Cambridge University Press
978-0-521-31994-2 - Response and Stability: An Introduction to the Physical Theory
A. B. Pippard
Excerpt
More information

and

$$W_0 = f^2/4\omega_0^2.$$

W drops to one-half of its peak value when $\Delta\omega = \pm\lambda$. The width of resonance, measured at half the peak intensity, is therefore 2λ, or ω_0/Q.

Exercise 1.10. A mass attached to a spring and subject to slight viscous damping is acted upon by an oscillating force. Show that when the frequency is tuned to give the maximum response, the response will be Q times the amplitude that would result from the same force acting on the mass alone, without the spring.

Exercise 1.11. You will have observed that after the initial transients have died away the system always responds at the frequency of the driver. Show that this is true not only for a simple harmonic oscillator, but for any system where free motion is described by a linear differential equation with constant coefficients

$$ax + b\dot{x} + c\ddot{x} + d\dddot{x} + \ldots = 0.$$

We shall find later that this is not true in general for systems obeying non-linear equations.

© Cambridge University Press www.cambridge.org