CAMBRIDGE

Cambridge University Press
0521018102 - Mossbauer Spectroscopy
Edited by Dominic P. E. Dickson and Frank J. Berry
Excerpt
More information

1

Principles of Mössbauer spectroscopy

DOMINIC P. E. DICKSON &
FRANK J. BERRY

1 Introduction

Mössbauer spectroscopy has now established itself as a technique which can provide valuable information in many areas of science. This book sets out to consider the unique contribution of Mössbauer spectroscopy in terms of the specific information it can give to the study of the bonding, structural, magnetic, time-dependent and dynamical properties of various systems. Accordingly, each of the following chapters is devoted to a detailed consideration of one fundamental aspect of the total information that can be provided by Mössbauer spectroscopy. It is intended that by adopting this approach the book will provide an overview and appraisal of the technique that will be of value both to the experienced practitioner who has perhaps worked in one particular area of the technique, and also to the newcomer or student who needs to see the technique in its proper context. It is also hoped that those working in other areas of science may find this book a helpful guide in relating information obtained from Mössbauer spectroscopy with that derived from other techniques and also in evaluating the potential value of Mössbauer spectroscopy for providing information relevant to their particular problems and systems. The importance of Mössbauer spectroscopy as a means by which a variety of problems in a diversity of scientific disciplines may be examined is already well covered in a number of texts (e.g. Cohen, 1976 & 1980; Gonser, 1975 & 1981; Thosar, Srivastava, Iyengar & Bhargava, 1983; Long, 1984) and no attempt is made here to provide coverage of all possible areas of application.

This first chapter provides an introduction to Mössbauer spectroscopy and a background for the subsequent chapters. Hence the next few pages contain a general discussion of the Mössbauer effect, the conditions necessary for its observation, and the way in which Mössbauer

© Cambridge University Press www.cambridge.org

CAMBRIDGE

Cambridge University Press
0521018102 - Mossbauer Spectroscopy
Edited by Dominic P. E. Dickson and Frank J. Berry
Excerpt
More information

spectroscopy has been developed as an experimental technique. The various factors determining the Mössbauer spectrum are then treated in more detail since these relate directly to the information which can be obtained from Mössbauer spectroscopy and hence to the material contained in the remainder of the book. Finally the various areas of application of Mössbauer spectroscopy are briefly considered to give an indication of the ways in which this information can be used.

The nomenclature, symbols and conventions used in this book correspond with those normally used in the field as exemplified in a number of texts which also contain more extensive treatments of the theory and practice of Mössbauer spectroscopy and to which the reader requiring this information is referred (e.g. Gibb, 1977; Gonser, 1975; Greenwood & Gibb, 1971; May, 1971; Wertheim, 1964).

2 The Mössbauer effect

For many years it was recognised that the gamma rays emitted when radioactive nuclei in excited states decay might excite other stable nuclei of the same isotope, thereby giving rise to nuclear resonant absorption and fluorescence. However, initial attempts to detect these resonant processes were unsuccessful mainly because of the nuclear recoil, which accompanies both the emission and absorption of the gamma ray by a free nucleus. As a result of this nuclear recoil the energy of the emitted gamma ray is less than the energy difference between the two nuclear levels, while if resonant absorption is to occur the energy of the incoming gamma ray needs to be greater than this energy difference. Thus for free nuclei the recoil energy prevents resonant absorption of gamma rays under normal circumstances.

In 1957 Mössbauer discovered that a nucleus in a solid can sometimes emit and absorb gamma rays without recoil (Mössbauer, 1958); because when it is in a solid matrix the nucleus is no longer isolated, but is fixed within the lattice. In this situation the recoil energy may be less than the lowest quantised lattice vibrational energy and consequently the gamma ray may be emitted without any loss of energy due to the recoil of the nucleus. Since the probability of such a recoil-free event depends on the energy of the nuclear gamma ray the Mössbauer effect is restricted to certain isotopes with low-lying excited states. This probability also depends on the temperature and on the vibrational properties of the solid in which the Mössbauer nucleus is situated. The Mössbauer gamma ray has a finite spread in energy, which is quantified by a linewidth, defined as the full width at half maximum intensity and related to the lifetime of the nuclear excited state. The ease with which the Mössbauer effect is observed for a particular

© Cambridge University Press www.cambridge.org

CAMBRIDGE

Cambridge University Press
0521018102 - Mossbauer Spectroscopy
Edited by Dominic P. E. Dickson and Frank J. Berry
Excerpt
More information

isotope is strongly dependent on the value of this gamma-ray linewidth. This places further restrictions on the isotopes for which Mössbauer spectroscopy is of practical use. In general, the Mössbauer effect is optimised for low-energy gamma rays associated with nuclei strongly bound in a crystal lattice at low temperatures.

The first example of the recoil-free resonant absorption of gamma rays was observed by Mössbauer using ^{191}Ir (Mössbauer, 1958) and the Mössbauer effect has now been detected in over one hundred isotopes. However, most of the practical applications of the effect in the technique known as Mössbauer spectroscopy have been with a much smaller number of isotopes in which the conditions for observing the Mössbauer effect and obtaining useful information from it are particularly favourable.

Figure 1.1 shows a periodic table of the elements indicating those which have Mössbauer isotopes as well as the ease with which the Mössbauer effect can be observed. As ^{57}Fe has the most advantageous combination of properties for Mössbauer spectroscopy the great majority of studies continue to involve this isotope and the technique has therefore been widely used for the investigation of iron-containing systems. Since ^{57}Fe Mössbauer spectroscopy provides good examples of most of the different types of information that can be obtained from this technique, work with this isotope will often be used to illustrate them in this book. However, it should not be forgotten that similar and equally valuable information can also be very effectively obtained with the other isotopes. The detailed

Fig. 1.1. A periodic table of elements with Mössbauer isotopes. The elements with easier to use and more extensively studied isotopes are shown shaded, while those with more difficult to use and less extensively studied isotopes are shown hatched. These two categories were distinguished by whether more or less than one hundred papers were published on work with these Mössbauer isotopes between 1953 and 1982 (Long, 1984). It should be noted that in this period 10 000 papers were published on studies involving the most extensively used isotope ^{57}Fe.

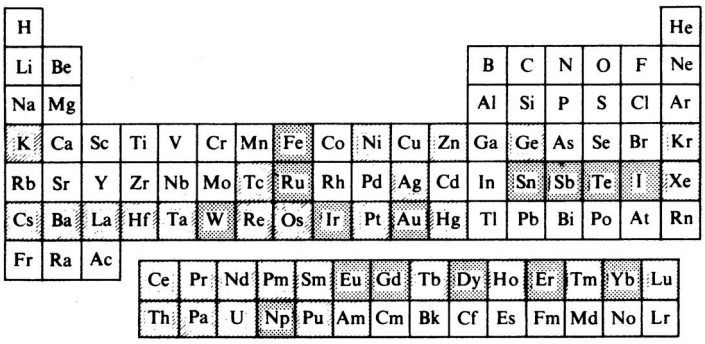

© Cambridge University Press www.cambridge.org

CAMBRIDGE

Cambridge University Press
0521018102 - Mossbauer Spectroscopy
Edited by Dominic P. E. Dickson and Frank J. Berry
Excerpt
More information

characteristics of the various Mössbauer isotopes and the problems and advantages associated with using them are discussed in a number of the basic texts on Mössbauer spectroscopy.

3 Mössbauer spectroscopy

The energy levels of a nucleus situated in an atom and in a solid are modified by the environment of the nucleus. Mössbauer spectroscopy is a technique which enables these energy levels to be investigated by measuring the energy dependence of the resonant absorption of Mössbauer gamma rays by nuclei. This is possible since the recoil-free processes arising from the Mössbauer effect lead to the resonant absorption of gamma rays with an extremely precise energy. This enables the very small energy changes resulting from the hyperfine interactions between the nucleus and its surrounding electrons to be investigated and therefore Mössbauer spectroscopy provides a means of using the nucleus as a probe of its environment.

The most usual experimental arrangement for Mössbauer spectroscopy involves a radioactive source containing the Mössbauer isotope in an excited state and an absorber consisting of the material to be investigated which contains this same isotope in its ground state. For example, the source for ^{57}Fe Mössbauer spectroscopy is normally radioactive ^{57}Co which undergoes a spontaneous electron capture transition to give a metastable state of ^{57}Fe which in turn decays to the ground state via a gamma ray cascade which includes the 14.4 keV Mössbauer gamma ray (Figure 1.2).

The radioactive source nuclei are usually embedded in a matrix which provides the necessary solid environment as well as giving the simplest possible hyperfine interaction between these nuclei and their environment. In the normal transmission experiment the gamma rays emitted by the source pass through the absorber, where they may be partially absorbed, and they then pass to a suitable detector. In order to investigate the energy levels of the Mössbauer nucleus in the absorber it is necessary to modify the energy of the gamma rays emitted by the source so that they can have the correct energy for resonant absorption. This is usually accomplished by moving the source relative to a stationary absorber, and hence giving the gamma rays an energy shift as a result of the first-order relativistic Doppler effect. The motion of the source is normally oscillatory in order to provide an energy scan.

The typical Mössbauer spectroscopy experiment described above is depicted in Figure 1.3. Resonant absorption occurs when the energy of the gamma ray just matches the nuclear transition energy for a Mössbauer

© Cambridge University Press www.cambridge.org

CAMBRIDGE

Cambridge University Press
0521018102 - Mossbauer Spectroscopy
Edited by Dominic P. E. Dickson and Frank J. Berry
Excerpt
More information

nucleus in the absorber. The resulting Mössbauer spectrum consists of a plot of gamma ray counts (or relative absorption) against the velocity of the source with respect to the absorber, usually measured in millimetres per second, which constitutes the energy axis of this spectroscopy. For the simplest case of both source and absorber containing the Mössbauer isotope in the same cubic environment the spectrum consists of a single absorption line at zero velocity, as shown in Figure 1.3.

The experimental aspects of Mössbauer spectroscopy are well developed and are documented in considerable detail elsewhere (e.g. Gonser, 1975; Greenwood & Gibb, 1971; Gruverman, 1965–74; May, 1971; Wertheim, 1964). A schematic diagram of a typical Mössbauer spectrometer is shown

Fig. 1.2. Nuclear decay scheme of ^{57}Co showing the transition giving the 14.4 keV Mössbauer gamma ray.

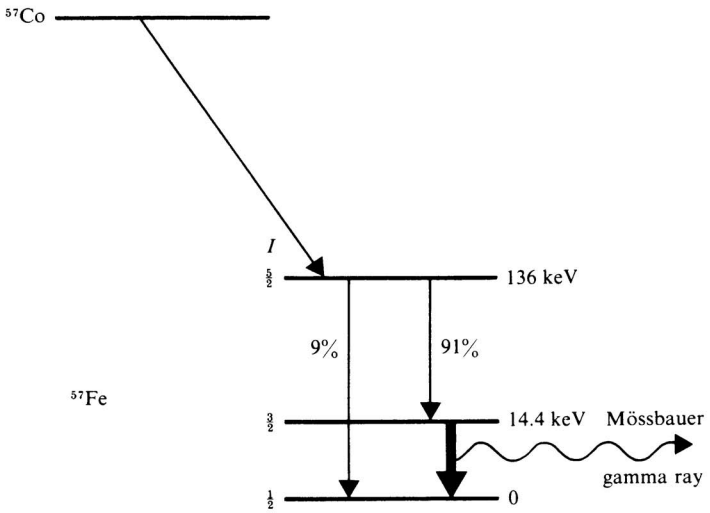

Fig. 1.3. A schematic representation of Mössbauer spectroscopy with the simplest situation of source and absorber nuclei in identical environments and showing the resulting Mössbauer spectrum with an absorption line at zero velocity.

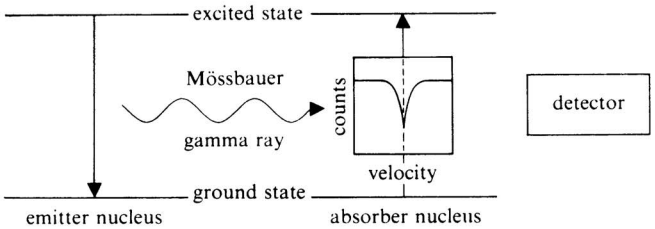

© Cambridge University Press www.cambridge.org

CAMBRIDGE

Cambridge University Press
0521018102 - Mossbauer Spectroscopy
Edited by Dominic P. E. Dickson and Frank J. Berry
Excerpt
More information

in Figure 1.4. The source motion is normally obtained by an electromechanical transducer, similar to a loudspeaker, and driven by a suitable electronics system. The detector system is dependent on the energy of the particular gamma ray involved but is essentially standard nucleonics with a single channel analyser selecting the counts corresponding to the Mössbauer gamma ray. The synchronisation of the gamma ray counting and the source motion is now generally achieved by a microprocessor system in which the counts are accumulated in channels corresponding to the velocity of the source relative to the absorber. The spectrum is accumulated for a period typically of the order of hours or days during which this spectrum may be monitored on a display screen. When a spectrum with a satisfactory signal-to-noise ratio has been obtained it is normally stored on magnetic tape or disc for subsequent computer analysis.

The quality of the Mössbauer spectrum and also the information that can be obtained from it can frequently be enhanced by making measurements with the absorber (and sometimes the source) under particular experimental conditions, such as low temperatures, applied magnetic fields or high pressures. Many of the experimental aspects of making Mössbauer measurements on various systems are concerned with providing the required sample environment. Although the nature of the absorber is dependent on the type of system being investigated it must contain a sufficient amount of the Mössbauer isotope to provide a measurable

Fig. 1.4. A block diagram of a typical Mössbauer spectrometer.

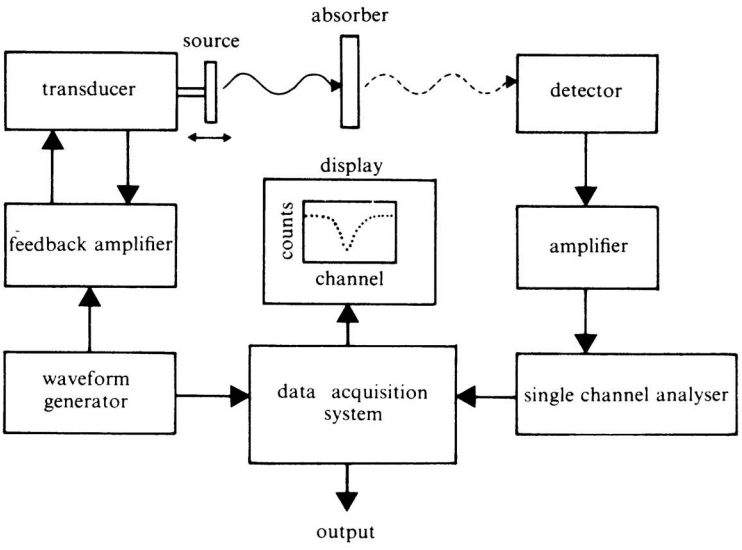

© Cambridge University Press www.cambridge.org

CAMBRIDGE

Cambridge University Press
0521018102 - Mossbauer Spectroscopy
Edited by Dominic P. E. Dickson and Frank J. Berry
Excerpt
More information

resonant absorption and it must normally be in a solid form (e.g. single crystal, powdered solid, metal or frozen solution).

The experimental implementation of Mössbauer spectroscopy discussed in this section corresponds to the most usual case of an absorption experiment, involving transmission geometry and the detection of the Mössbauer gamma rays. It is also possible to carry out Mössbauer spectroscopic measurements in which the sample under investigation forms the radioactive source, thus allowing measurements involving elements which form the parent nuclei in a Mössbauer decay scheme. Another possibility, which is particularly appropriate for thick samples which are not amenable to examination by transmission, involves a scattering experiment with detection of either the Mössbauer gamma rays, or the conversion electrons or X-rays which are associated with the absorption process. These and other more exotic Mössbauer spectroscopy experiments, which are considered in detail elsewhere (e.g. Gonser, 1981; Gruverman, 1965–74), enable Mössbauer spectroscopy to be applied to a wider range of systems.

4 Factors determining the Mössbauer spectrum

A Mössbauer spectrum is characterised by the number, shape, position and relative intensity of the various absorption lines. These features result from the nature of the various hyperfine interactions and their time dependence, as well as on any motion of the Mössbauer nuclei.

The total absorption intensity of the spectrum is a function of the concentration of Mössbauer nuclei in the absorber and the cross-sections of the nuclear processes involved. This absorption intensity, together with the signal-to-noise ratio of the detection system and the total number of counts, determine the quality of the Mössbauer spectrum and the accuracy with which information can be obtained from it. It should be noted that Mössbauer spectroscopy is not generally an appropriate technique for measuring the total concentration of a certain nuclide within a system because it is usually relatively insensitive to small concentrations and because the absorption intensity depends on a number of other factors which may be difficult to quantify. However, relative concentrations of different chemical forms of the Mössbauer nuclide can frequently be obtained, such as the relative concentration of the element in different oxidation states.

The following sections will consider the various hyperfine interactions and other effects which determine the nature of the Mössbauer spectrum, and will also consider briefly how these factors relate to the types of information that can be obtained by Mössbauer spectroscopy.

© Cambridge University Press www.cambridge.org

CAMBRIDGE

Cambridge University Press
0521018102 - Mossbauer Spectroscopy
Edited by Dominic P. E. Dickson and Frank J. Berry
Excerpt
More information

4.1 Isomer shift

The isomer shift of the absorption lines in the Mössbauer spectrum, also sometimes known as the chemical shift, the chemical isomer shift or the centre shift, is a result of the electric monopole (Coulomb) interaction between the nuclear charge distribution over the finite nuclear volume and the electronic charge density over this volume. This shift arises because of the difference in the nuclear volume of the ground and excited states, and the difference between the electron densities at the Mössbauer nuclei in different materials. In a system where this electric monopole interaction is the only hyperfine interaction affecting the nuclear energy levels, the nuclear ground and excited states are unsplit, but their separation is different in the source and absorber by an amount given by the isomer shift δ.

This situation is shown schematically in Figure 1.5. In this diagram the transition energy between the nuclear ground and excited states in an isolated nucleus (shown on the left of the diagram) is modified by the different electronic environments of the nucleus in the source and absorber. The application of a Doppler velocity to the source is therefore necessary to attain resonance and detect the shift in the position of the resonance line from zero velocity (*cf.* Figure 1.3); the resulting Mössbauer spectrum consists of a single absorption line at a position determined by the isomer shift (Figure 1.5(*a*)). When additional hyperfine interactions are present the isomer shift sets the position of the centre of gravity of the whole Mössbauer spectrum. It should be noted that the isomer shift is not an absolute quantity since it represents the difference between the electric monopole

Fig. 1.5. The effects on the nuclear energy levels of ^{57}Fe of (*a*) the isomer shift and (*b*) the quadrupole splitting. The Mössbauer absorption transitions and the resulting spectra, which give the isomer shift δ and the quadrupole splitting Δ, are also shown.

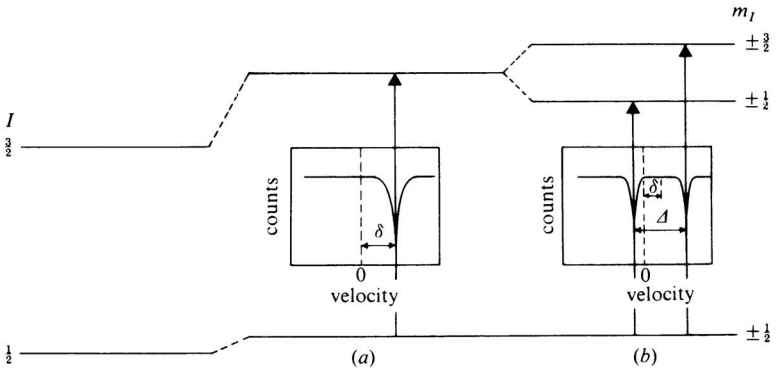

© Cambridge University Press www.cambridge.org

CAMBRIDGE

Cambridge University Press
0521018102 - Mossbauer Spectroscopy
Edited by Dominic P. E. Dickson and Frank J. Berry
Excerpt
More information

interactions in the source and the absorber. Therefore in order to make comparisons of the isomer shifts obtained from different absorbers the isomer shift data are generally expressed relative to a standard absorber which is also used to determine the zero of the velocity axis of the spectrum. These standard absorbers are specific to the particular isotope used and for the common Mössbauer isotopes there are universally recognised reference standards for isomer shifts. Thermal vibration of the nuclei will also shift the gamma-ray energy as a result of the relativistic second-order Doppler effect. As these thermal vibrations are temperature dependent the temperature of both the source and absorber should be considered when quoting and comparing isomer shifts.

The isomer shift, in common with the other hyperfine parameters of the Mössbauer spectrum, is a function of both nuclear and electronic properties of the system, which are combined in such a way that independent quantitative information on both these properties cannot be obtained by Mössbauer spectroscopy alone. Since it is the electronic properties which are usually of interest and because the nuclear parameters are constant, the hyperfine parameters are most frequently used to compare the electronic properties of different systems. In situations where the nuclear parameters have already been determined it is possible to derive quantitative information on the electronic properties from the Mössbauer spectroscopic measurements. For example, in the case of the isomer shift the relevant nuclear parameters are the nuclear radii of the ground and excited states and when these are known the electronic parameters, which are the electron densities at the Mössbauer nuclei in the source and absorber, can be obtained. The latter are dependent on the electronic structure of the atom and hence the isomer shift δ is an important means by which atomic oxidation states, which are sometimes difficult to determine by other techniques, can be directly investigated. Similarly covalency effects and the shielding of one set of electrons by another also influences the electronic environment of the nucleus and may be reflected in changes in the isomer shift. The isomer shift data can also be used to make a quantitative assessment of the electron-withdrawing power of substituent electronegative groups and the bonding properties of ligands.

4.2 *Quadrupole splitting*

In considering the electric monopole interaction and the resulting isomer shift it is implicitly assumed that the nuclear charge distribution is spherical. However, nuclei in states with a nuclear angular momentum quantum number $I > \frac{1}{2}$ have non-spherical charge distributions which are characterised by a nuclear quadrupole moment. When the nuclear

© Cambridge University Press www.cambridge.org

CAMBRIDGE

Cambridge University Press
0521018102 - Mossbauer Spectroscopy
Edited by Dominic P. E. Dickson and Frank J. Berry
Excerpt
More information

quadrupole moment experiences an asymmetric electric field, produced by an asymmetric electronic charge distribution or ligand arrangement and characterised by a tensor quantity called the electric field gradient (EFG), an electric quadrupole interaction occurs which gives rise to a splitting of the nuclear energy levels corresponding to different alignments of the quadrupole moment with respect to the principal axis of the electric field gradient.

In the case of ^{57}Fe the excited state has $I = \frac{3}{2}$, and in the presence of a non-zero electric field gradient this splits into two substates characterised by $m_I = \pm\frac{1}{2}$ and $m_I = \pm\frac{3}{2}$. This situation leads to a two-line spectrum, with the two lines separated by the quadrupole splitting Δ (Figure 1.5(*b*)).

The quadrupole splitting obtained from the Mössbauer measurement involves both a nuclear quantity, the quadrupole moment, and an electronic quantity, the electric field gradient. The value of the nuclear quadrupole moment is fixed for a given nuclide and it is the details of the electric field gradient which can be derived from the Mössbauer spectrum. The electric field gradient contains a number of different contributions. One of these arises from the valence electrons of the Mössbauer atom itself and is associated with asymmetry in the electronic structure. This asymmetry results from partly filled electronic shells occupied by the valence electrons. Another contribution is from the lattice and arises from the asymmetric arrangement of the ligand atoms in non-cubic lattices. Molecular orbitals can also contribute to the electric field gradient. The effects of these contributions at the Mössbauer nucleus are modified by the polarisation of the core electrons of the Mössbauer atom which may reduce or enhance the electric field gradient.

The quadrupole splitting observed in a particular system therefore reflects the symmetry of the bonding environment and the local structure in the vicinity of the Mössbauer atom. Valuable information can be obtained by comparing quadrupole splitting data obtained from related materials, and this can be particularly informative when the data are considered in conjunction with data on the isomer shifts. Quadrupole splitting data can for example give information relating to the electronic population of various orbitals, isomerisation phenomena, ligand structure, short-lived reaction intermediates, semiconductor properties and the defect structure of solids. As with the other Mössbauer hyperfine parameters, the usefulness of quadrupole splitting data for yielding significant information is strongly dependent on whether he nuclear parameters are sufficiently favourable to allow differences in the electronic environment to be reflected in significant and interpretable changes in the spectra.

© Cambridge University Press www.cambridge.org